Town of Bristol, Rhode Island
10 Court Street
Bristol, Rhode Island 02809

Town of Barrington, Rhode Island
283 County Road
Barrington, Rhode Island 02806

REQUEST FOR QUALIFICATION/REQUEST FOR PROPOSALS

PUBLIC-PRIVATE PARTNERSHIP FOR ON-SITE SOLAR PROJECTS

BID #850

Quahog Solar

Quahog Solar

November 30, 2016

Town of Bristol, Rhode Island
10 Court Street
Bristol, Rhode Island 02809

Town of Barrington, Rhode Island
283 County Road
Barrington, Rhode Island 02806

Dear Sirs and Madams,

On behalf of Quahog Solar, I'm honored to submit this proposal to serve as developer for the proposed on-site solar projects for the Towns of Bristol and Barrington. We're pleased with our response to your Request for Proposals and are hopeful that the Towns will find that our proposal will address your goal of obtaining green energy in the most cost-effective, safe, and reliable manner. As described in our technical write-up, our engineers have done a great deal of preliminary design work for this project, and we've prepared detailed drawings for your sites.

Beyond our desire to offer the Towns the lowest cost power, in considering our response to your RFP we also identified further goals that we view as key to your projects' success:

1. choosing a partner with the financial sophistication and strength to close the financing successfully;
2. selecting a firm with a proven development record to minimize the risk that your program will fail to live up to its production and savings targets; and
3. hiring a partner with a solid local presence to ensure the team's continued attentiveness to your program even after construction is finished.

I hope that our proposal will best help you to achieve these objectives.

1. Financial Sophistication and Strength. The Towns' development partner needs both the financial sophistication to understand and optimize the complex incentive, tax, and environmental attributes of the transaction and the financial strength to enable it to fulfill its obligations to you. Our professionals have decades of experience in municipal and project financings, providing specific understanding of the complex legal and tax issues associated with transactions such as yours, and to date have completed in excess of $20 billion in these financings. Having built *88 systems* on behalf of municipal or quasi-municipal off-takers, Quahog's professionals have a thorough understanding of these credits and have cultivated an investor base eager to participate in these projects. Significantly, our team has never failed to obtain funding for a facility which we were chosen to develop nor for a site which we

desired to purchase. *In all, through our various funds and special-purpose entities we've developed or purchased more than 32.8 MW of solar, and we have nearly 8MW of additional projects under construction.*

2. Construction Track Record. Quahog's engineers and finance professionals have worked with a variety of EPC contractors ranging from small, locally based firms to the largest multinational Fortune 500 contractors; projects that we've developed have usually out-produced our expected generation goals. In addition, those projects that we've purchased (rather than built ourselves) have generally seen substantial increases in production once our affiliated operations & maintenance personnel have taken an active role in the sites.

   To build your proposed systems, Quahog has identified US Solar as our preferred contractor, and they've expressed a strong interest in working with us on this Project based on the preliminary information we had available. US Solar, headquartered in Attleboro, MA, has an impressive background in building PV systems and we have included information about them in our proposal. If selected by the Towns, Quahog would immediately begin working with them to finalize a contract and other critical details. In the unlikely event that Quahog and US Solar were unable to come to final terms, we would quickly identify another contractor with the Rhode Island General Contractor's License as required by the Towns.

3. Local Presence. A strong local presence is critical not just to ensure the smoothest possible installation but also to assure that your systems' ongoing maintenance needs are given prompt attention long after construction is complete. New York is our home and an area commitment by SunLight, and this focus will ensure that we'll be there when the City needs us.

In closing, we hope that the Towns will agree that our proposal best meets your needs for this Project, not just on the basis of price but also as a result of the unique strengths and qualifications of the Quahog team. I hope that the above information is useful to you and can be reached at the number and e-mail below if you require any additional information.

Sincerely,

_____

John DiBari
Quahog Solar, LLC
john.dibari@nextpathfinance.com
(401) 258-4665

Quahog Solar

Table of Contents

Requirement Page

1. Bid Form – Town of Bristol 4
2. Bid Form – Town of Barrington 5
3. Non-Collusion Affidavit 6
4. Bidder's Statement Regarding Insurance Coverage 7
5. Bidder's Statement of Relevant Experience 8
6. Company Ownership 9
7. Location of Company Offices 10
8. Number of Employees 10
9. Locations from Which Employees will be Assigned 10
10. Bidder's Point of Contact 11
11. Company Background/History and Qualifications 11
12. Length of Time Quahog Has Provided Theses Services 17
13. List of Subcontractors 17
14. Copy of RI General Contractor's License 18
15. Specification Sheets of Proposed PV Equipment 19

Appendix I: Technical Proposal .....

Appendix II: Pricing Proposal .....

TOWN OF BRISTOL and TOWN OF BARRINGTON, RI

INVITATION FOR RFQ/RFP
BID #850
PUBLIC-PRIVATE PARTNERSHIP FOR ON-SITE SOLAR PROJECTS

Attachment A
Town of Bristol

BID FORM

NAME AND ADDRESS OF BIDDING FIRM:

QUAHOG SOLAR LLC
5 FRIENDSHIP PLACE
NEWPORT RI 02840

I herein agree to abide by all requirements as detailed in the "Invitation for Bid #850".

Signature: _____

Printed Name & Title: _____

Date: _____

TOWN OF BRISTOL and TOWN OF BARRINGTON, RI

INVITATION FOR RFQ/RFP
BID #850
PUBLIC-PRIVATE PARTNERSHIP FOR ON-SITE SOLAR PROJECTS

Attachment A
Town of Barrington

BID FORM

NAME AND ADDRESS OF BIDDING FIRM:

QUAHOG SOLAR LLC
5 FRIENDSHIP PLACE
NEWPORT RI 02840

I herein agree to abide by all requirements as detailed in the "Invitation for Bid #850".

Signature: _____

Printed Name & Title: _____

Date: _____

TOWN OF BRISTOL and TOWN OF BARRINGTON, RI

INVITATION FOR RFQ/RFP
BID #850
PUBLIC-PRIVATE PARTNERSHIP FOR ON-SITE SOLAR PROJECTS

ATTACHMENT B
Non-COLLUSION AFFIDAVIT
To Be Completed, Notarized, and Submitted With Bid

State of Rhode Island
County of Bristol

"JOHN DiBARI, Bidder, being first duly sworn, deposes and says that he or she is Owner of the party making the foregoing bid that the bid is not made in the interest of, or on behalf of, any undisclosed person, partnership, company, association, organization, or corporation; that the bid is genuine and not collusive or sham; that the Bidder has not directly or indirectly induced or solicited any other Bidder to put in a false or sham bid, and has not directly or indirectly colluded, conspired, connived, or agreed with any Bidder or anyone else to put in a sham bid, or that anyone shall refrain from bidding; that the Bidder has not in any manner, directly or indirectly, sought by agreement, communication, or conference with anyone to fix the bid price of the Bidder or any other Bidder, or to fix any overhead, profit, or cost element of the bid price, or of that of any other Bidder, or to secure any advantage against the public body awarding the contract of anyone interested in the proposed contract; that all statements contained in the bid are true; and further, that the Bidder has not , directly or indirectly, submitted his or her bid price or any breakdown thereof, or the contents thereof, or divulged information or data relative thereto, or paid, and will not pay, any fee to any corporation, partnership, company association, organization, bid depository, or to any member or agent thereof to effectuate a collusive or sham bid."

NOV 30, 2016
Date

(Signed at)

QUAHOG SOLAR LLC
Bidder name
(Person, Firm, Corp.)

Authorized Representative

5 FRIENDSHIP PLACE
Address

Representative's Name

NEWPORT RI 02840
City, State, Zip

Representative's Title

TOWN OF BRISTOL and TOWN OF BARRINGTON, RI

INVITATION FOR RFQ/RFP
BID #850
PUBLIC-PRIVATE PARTNERSHIP FOR ON-SITE SOLAR PROJECTS

ATTACHMENT C

BIDDER'S STATEMENT REGARDING INSURANCE COVERAGE

BIDDER HEREBY CERTIFIES that the Bidder has reviewed and understands the insurance coverage requirements specified in the Invitation for Bid No. 850, Public – Private Partnership for On-Site Solar Projects. Should the Bidder be awarded the contract for the work, Bidder further certifies that the Bidder can meet the specified requirements for insurance and agrees to provide the Town with a certificate of insurance which names the Town of Bristol and the Town of Barrington as an Additional Insured for the work specified.

Insurance Required:

- Workman's Compensation in compliance with statutory limits
- Comprehensive General Liability Insurance of at least $1,000,000.

QUAHOG SOLAR LLC
Name of Bidder (Person, Firm, or Corporation)

Signature of Bidder's Authorized Representative

Name & Title of Authorized Representative

Date of Signing

TOWN OF BRISTOL and TOWN OF BARRINGTON, RI

INVITATION FOR RFQ/RFP
BID #850
PUBLIC-PRIVATE PARTNERSHIP FOR ON-SITE SOLAR PROJECTS

ATTACHMENT D

BIDDER STATEMENT OF RELEVANT EXPERIENCE

List three (3) references for which your firm provided service within the last five years. *

I hereby certify that I have performed the work listed below.

Signature of Bidder

DESCRIPTION	DATES	CONTRACT AMOUNT	CUSTOMER CONTACT	CUSTOMER TELEPHONE
132 kW BLACK ROCK CONGREGATIONAL CHURCH	6/30/2015		KEN BRIX	203.255.3401
MULTIPLE SITES MEADOWLANDS SOLAR COOPERATIVE	2011		MICHAEL CAPABIANCO	732.502.5755
TETERBOROUGH AIRPORT	2011		RALPH ROMANO	201.288.1775

* SYSTEMS DEVELOPED BY SUNLIGHT GENERAL

COMPANY OWNERSHIP.

Quahog Solar LLC, a Delaware corporation licensed to do business in the State of Rhode Island, was formed in 2016 and is a joint venture between SunLight General Capital, headquartered in New York City, and NextPath Finance, which has offices in Newport. Currently, Quahog is working on developing approximately fifteen sites in Rhode Island.

About SunLight General Capital

SunLight General Capital develops, finances, owns, and operates renewable energy projects, helping to promote access to clean, affordable renewable energy. We sell electricity to our clients, usually municipal entities or qualifying commercial sites, through long-term purchase contracts. Founded by professionals from the solar and finance industries, since 2009 SunLight General Capital and its managers have developed, have under development, or have purchased more than 100 sites in an aggregate amount over 40 MW. Our focus is in the northeast, thus ensuring that we will always be available to service the Towns' systems. *We currently provide our own in-house O&M services for all of these sites to maximize their production and financial performance.*

While many firms attempt to promote renewable energy, we believe that what sets SunLight General Capital apart from our competitors is our solid financial background. Simply put, SunLight General Capital is able to recognize those projects that are actually financible, i.e. those sites which will make sense for our our investors or third-party sources and which will have a long-term return justifying their risks. *Our firms have never failed to achieve financing for a site for which we've been selected as developer*. As described below, we also have significant in-house engineering expertise, giving our firm an unmatched understanding of all phases of completing a successful solar project. Lastly, although we have not built any of the sites ourselves, through our in-house O&M arm (Azimuth 180) *we actively service all of the sites we own to insure that energy production remains at its full potential for our clients and our investors*.

About NextPath Finance

NextPath Finance is a Rhode Island based company dedicated to developing renewable energy projects in the Ocean State. We utilize our extensive experience in creating and operating public-private partnerships of various types and deep knowledge of renewables to lower the expenses of our clients. We have existing relationships with the leading solar manufacturers, investment banks, private equity funds and regional lending institutions which we leverage to allow us to provide flexible and creative financing solutions to fit any renewable energy project. Our team has been actively involved in capital raises totaling more than $2 billion in multiple states and jurisdictions to support real estate, renewable

energy and public private partnership (P3) programs totaling $2 billion in development costs.

LOCATION OF COMPANY OFFICES

As stated above, Quahog Solar LLC is a joint venture between SunLight General Capital and NextPath Finance and was formed to do business in the State of Rhode Island. SunLight maintains its headquarters at 135 East 57th Street, 6th Floor, New York, New York 10022. Our engineering and O&M staffs are located at 109 Stryker Lane, Building 3 Unit 2, Hillsborough, New Jersey 08844.

NextPath Finance is located at 5 Friendship Place, Newport, Rhode Island 02840.

NUMBER OF EMPLOYEES

SunLight General Capital and NextPath Finance together employ 13 professionals.

LOCATION(S) FROM WHICH EMPLOYEES WILL BE ASSIGNED

If Quahog is selected to serve as Developer for the Towns' projects, the full resources of the SunLight and NextPath teams will be available to support the successful completion of the transaction. Engineering and project management will be carried out in SunLight's Hillsborough, New Jersey office (which will also provide O&M services for life of the PPA.) Financing and financial modeling will be accomplished out of SunLight's New York City office, and "boots on the ground" logistical support will be provided by NextPath.

It's currently anticipated that construction personnel will be arranged through US SolarWorks, based in Attleboro, Massachusetts.

Quahog Solar

POINT OF CONTACT

If Quahog is selected to serve as developer for the Town's projects, your point of contact would be the following:

John DiBari
john.dibari@nextpathfinance.com
(401) 258-4665

Backing up John would be:

Debbie Amarant
debbie.amarant@nextpathfinance.com
203-434-5196

COMPANY BACKGROUND/HISTORY AND QUALIFICATIONS

Although Quahog Solar LLC is a relatively new entity, we are currently in the process of developing fifteen sites within the State of Rhode Island. More critically, Quahog is really the recipient of the combined talents and experience of the SunLight General/NextPath teams.

As stated above, SunLight General Capital develops, finances, owns, and operates renewable energy projects, helping to promote access to clean, affordable renewable energy. We sell electricity to our clients, usually municipal entities or qualifying commercial sites, through long-term purchase contracts. Founded by professionals from the solar and finance industries, since 2009 SunLight General Capital and its managers have developed, have under development, or have purchased more than 100 sites in an aggregate amount over 40 MW. Our focus is in the northeast, thus ensuring that we will always be available to service the Towns' systems. *We currently provide our own in-house O&M services for all of these sites to maximize their production and financial performance.*

While many firms attempt to promote renewable energy, we believe that what sets SunLight General Capital apart from our competitors is our solid financial background. Simply put, SunLight General Capital is able to recognize those projects that are actually financible, i.e. those sites which will make sense for our our investors or third-party sources and which will have a long-term return justifying their risks. *Our firms have never failed to achieve financing for a site for which we've been selected as developer*. As

described below, we also have significant in-house engineering expertise, giving our firm an unmatched understanding of all phases of completing a successful solar project. Lastly, although we have not built any of the sites ourselves, through our in-house O&M arm (Azimuth 180) *we actively service all of the sites we own to insure that energy production remains at its full potential for our clients and our investors*.

Provided on the following pages is a complete listing of systems either developed or purchased by SunLight, as well as those sites which are currently in process.

Currently operational: 100 systems, aggregating 32.8 MW. Of these, we developed 90 systems (27.3 MW) and purchased 10 systems (5.5 MW).

27 sites, aggregating approximately 8 MW, are currently under construction.

SITE	SYSTEM ADDRESS	STATE	SIZE (kW DC)	SYSTEM TYPE	PTO or Purchase Date	SUNLIGHT ROLE	OFFTAKER(S)	OFF-TAKER CONTACT	OFFTAKER EMAIL
Bergen County Prosecutor's Office	100 Eisenhower Drive, Paramus, NJ 07652	NJ	115.92	SYSTEM TYPE	Roof	12/21/2010 Own, Manage, Operate & Maintain	County of Bergen	Marty Murtagh	mmurtagh@co.bergen.nj.us
One Bergen Plaza Parking Garage	One Bergen County Plaza, Hackensack, NJ 07601	NJ	341.32	Municipal	Roof	6/21/2011 Own, Manage, Operate & Maintain	County of Bergen	Marty Murtagh	mmurtagh@co.bergen.nj.us
Teterboro Airport Hangar 109	112 Charles A. Lindbergh Dr., Teterboro, NJ 07608	NJ	341.32	Commercial	Roof	7/6/2011 Own, Manage, Operate & Maintain	Jet Aviation Holdings USA, Inc.	Ralph Romano	ralph.romano@jetaviation.com
Teterboro Airport Hangar 111	112 Charles A. Lindbergh Dr., Teterboro, NJ 07608	NJ	177.10	Commercial	Roof	7/6/2011 Own, Manage, Operate & Maintain	Jet Aviation Holdings USA, Inc.	Ralph Romano	ralph.romano@jetaviation.com
Teterboro Airport Hangars 113/114	112 Charles A. Lindbergh Dr., Teterboro, NJ 07608	NJ	180.32	Commercial	Roof	7/6/2011 Own, Manage, Operate & Maintain	Jet Aviation Holdings USA, Inc.	Ralph Romano	ralph.romano@jetaviation.com
Ansonia High School	20 Pulaski Highway, Ansonia, CT 06401	CT	198.99	Municipal	Roof	7/27/2011 Own, Manage, Operate & Maintain	Ansonia Public Schools	Bobby Evans	bevans@ansonia.org
Memorial Middle School	123 Liberty Street, Little Ferry, NJ 07643	NJ	149.70	Municipal	Roof	10/8/2012 Own, Manage, Operate & Maintain	Little Ferry Board of Education	Theresa Reuter	treuter@littleferry.k12.nj.us
Washington Elementary School	130 Liberty Street, Little Ferry, NJ 07643	NJ	117.85	Municipal	Carport	10/8/2012 Own, Manage, Operate & Maintain	Little Ferry Board of Education	Theresa Reuter	treuter@littleferry.k12.nj.us
Little Ferry Borough Hall	215 Liberty Street, Little Ferry, NJ 07643	NJ	31.85	Municipal	Roof	8/14/2012 Own, Manage, Operate & Maintain	Borough of Little Ferry	Judy Pesce	j-pesce@littleferrynj.org
Little Ferry Library	239 Liberty Street, Little Ferry, NJ 07643	NJ	15.93	Municipal	Roof	8/14/2012 Own, Manage, Operate & Maintain	Borough of Little Ferry	Judy Pesce	j-pesce@littleferrynj.org
Little Ferry Senior Center	95 Main St., Little Ferry, NJ 07643	NJ	28.67	Municipal	Roof	8/14/2012 Own, Manage, Operate & Maintain	Borough of Little Ferry	Judy Pesce	j-pesce@littleferrynj.org
Huber Elementary School	1520 Paterson Plank Rd, Secaucus, NJ 07094	NJ	194.29	Municipal	Roof	12/17/2012 Own, Manage, Operate & Maintain	Secaucus Board of Education	Cheryl Rhiel	crhiel@sboe.org
Secaucus High School/Middle School	11 Mill Ridge Rd., Secaucus, NJ 07094	NJ	423.61	Municipal	Roof	12/17/2012 Own, Manage, Operate & Maintain	Secaucus Board of Education	Cheryl Rhiel	crhiel@sboe.org
Secaucus Town Hall	1203 Paterson Plank Rd, Secaucus, NJ 07094	NJ	152.88	Municipal	Carport	10/26/2012 Own, Manage, Operate & Maintain	Town of Secaucus	Sandy D'arzen	sdarzen@secaucus.net
Carrier Clinic	252 County Road 601, Belle Mead, NJ 08502	NJ	1,816.56	Commercial	Roof	12/14/2012 Purchased, Manage, Operate & Maintain	Carrier Clinic	John LaPorta	jlaporta@carrierclinic.com
Halls Warehouse Corp. Building 501	501 Kentile Road, South Plainfield, NJ 07080	NJ	1,294.29	Commercial	Roof	12/14/2012 Purchased, Manage, Operate & Maintain	Halls Warehouse Corp.	Patrick Sahradnik	psahradnik@hallscorp.com
Halls Warehouse Corp. Building 601	601 Kentile Road, South Plainfield, NJ 07080	NJ	494.21	Commercial	Roof	12/14/2012 Purchased, Manage, Operate & Maintain	Halls Warehouse Corp.	Patrick Sahradnik	psahradnik@hallscorp.com
Morris 400, LLC	100 Ford Road, Denville, NJ 07834	NJ	252.75	Commercial	Roof	12/14/2012 Purchased, Manage, Operate & Maintain	Morris 400, LLC	Ellory Shaw	eshaw@wprealtynj.com
WP Properties, LLC	400 Ford Road, Denville, NJ 07834	NJ	402.48	Commercial	Roof	12/14/2012 Purchased, Manage, Operate & Maintain	WP Properties, LLC	Ellory Shaw	eshaw@wprealtynj.com
Stevens Institute of Technology (Phase 1)	Castle Point on Hudson, Hoboken, NJ 07030	NJ	110.63	Commercial	Carport	12/14/2012 Purchased, Manage, Operate & Maintain	Stevens Institute of Technology	Mark Byrd	mbyrd@stevens.edu
Stevens Institute of Technology (Phase 2)	Castle Point on Hudson, Hoboken, NJ 07030	NJ	82.88	Commercial	Roof	12/14/2012 Purchased, Manage, Operate & Maintain	Stevens Institute of Technology	Mark Byrd	mbyrd@stevens.edu
Black River Farms	20 Boss Road, Ringoes, NJ 08551	NJ	143.00	Commercial	Ground	12/14/2012 Purchased, Manage, Operate & Maintain	Southwark Farms, LLC	Amy Jorgensen	amyejorgensen@yahoo.com
Black Rock Congregational Church	3685 Black Rock Turnpike, Fairfield, CT 06825	CT	132.07	Commercial	Roof	6/30/2015 Own, Manage, Operate & Maintain	Black Rock Congregational Church	Ken Brix	kbrix@brcc.org
Brielle Elementary School	605 Union Lane, Brielle, NJ 08730	NJ	272.16	Commercial	Roof	8/10/2014 Purchased, Manage, Operate & Maintain	Brielle Board of Education	Eileen Gorga	egorga@brielle.k12.nj.us
Dancker, Sellew, & Douglas, Inc.	291 Evans Way, Branchburg, NJ 08876	NJ	674.96	Commercial	Roof	11/30/2015 Purchased, Manage, Operate & Maintain	Dancker, Sellew, & Douglas, Inc.	Cindi Butler	cbutler@dancker.com
Bedminster Township DPW	75 Miller Lane, Bedminster, NJ 07921	NJ	31.90	Municipal	Roof	2/6/2012 Own, Manage, Operate & Maintain	Bedminster Township	Trina Lindsey	tlindsey@bedminster.us
Bedminster Township Police Department	55 Miller Lane, Bedminster, NJ 07921	NJ	82.94	Municipal	Roof	2/6/2012 Own, Manage, Operate & Maintain	Bedminster Township	Trina Lindsey	tlindsey@bedminster.us
Bedminster Township Municipal Building	One Miller Lane, Bedminster, NJ 07921	NJ	95.70	Municipal	Carport	3/6/2013 Own, Manage, Operate & Maintain	Bedminster Township	Trina Lindsey	tlindsey@bedminster.us
Bedwell Elementary School	141 Seney Drive, Bernardsville, NJ 07924	NJ	130.79	Municipal	Roof	11/30/2012 Own, Manage, Operate & Maintain	Somerset Hills Board of Education	Denyse Rorke	drorke@avidxchange.com
Bernards High School	25 Olcott Avenue, Bernardsville, NJ 07924	NJ	92.51	Municipal	Roof	3/7/2013 Own, Manage, Operate & Maintain	Somerset Hills Board of Education	Denyse Rorke	drorke@avidxchange.com
Clarence Dillon Library	2336 Lamington Road, Bedminster, NJ 07921	NJ	41.47	Municipal	Roof	2/5/2013 Own, Manage, Operate & Maintain	Clarence Dillon Library	Sandy Putnam	sputnam@dillonlibrary.org
Ridge High School	268 South Finley Avenue, Basking Ridge, NJ 07920	NJ	194.59	Municipal	Roof	2/28/2013 Own, Manage, Operate & Maintain	Bernards Township Board of Education	Dave Harding	dharding@bernardsboe.com
William Annin Middle School	70 Quincy Road, Basking Ridge, NJ 07920	NJ	95.70	Municipal	Roof	1/22/2013 Own, Manage, Operate & Maintain	Bernards Township Board of Education	Dave Harding	dharding@bernardsboe.com
Bernards Township DPW/Engineering Building	277 South Maple Avenue, Basking Ridge, NJ 07920	NJ	44.66	Municipal	Roof	1/22/2013 Own, Manage, Operate & Maintain	Bernards Township	Gail Bell	gbell@bernards.org
Milltown School	611 Milltown Road, Bridgewater, NJ 08807	NJ	66.99	Municipal	Roof	5/2/2014 Own, Manage, Operate & Maintain	Bridgewater-Raritan Regional School District	Peter Starrs	pstarrs@brrsd.k12.nj.us
Bridgewater-Raritan High School	500 Garretson Road, Bridgewater, NJ 08807	NJ	360.47	Municipal	Carport	2/13/2013 Own, Manage, Operate & Maintain	Bridgewater-Raritan Regional School District	Peter Starrs	pstarrs@brrsd.k12.nj.us
Bridgewater-Raritan Middle School	836 Newmans Lane, Bridgewater, NJ 08807	NJ	207.35	Municipal	Carport	2/13/2013 Own, Manage, Operate & Maintain	Bridgewater-Raritan Regional School District	Peter Starrs	pstarrs@brrsd.k12.nj.us
Montgomery Township Lower Middle School	375 Burnt Hill Road, Skillman, NJ 08558	NJ	325.38	Municipal	Carport	4/16/2013 Own, Manage, Operate & Maintain	Montgomery Township Board of Education	Annette Wells	awells@mtsd.us
Montgomery Township High School (Phase 1)	1016 Route 601, Skillman, NJ 08558	NJ	261.58	Municipal	Carport	11/6/2013 Own, Manage, Operate & Maintain	Montgomery Township Board of Education	Annette Wells	awells@mtsd.us
Montgomery Township High School (Phase 2)	1016 Route 601, Skillman, NJ 08558	NJ	510.40	Municipal	Ground	11/6/2013 Own, Manage, Operate & Maintain	Montgomery Township Board of Education	Annette Wells	awells@mtsd.us
North Plainfield High School/Middle School	34 Wilson Avenue, North Plainfield, NJ 07060	NJ	127.60	Municipal	Roof	4/13/2013 Own, Manage, Operate & Maintain	North Plainfield Board of Education	Don Sternberg	don_sternberg@nplainfield.org
Somerset School	303 Somerset Street, North Plainfield, NJ 07060	NJ	63.80	Municipal	Roof	4/15/2013 Own, Manage, Operate & Maintain	North Plainfield Board of Education	Don Sternberg	don_sternberg@nplainfield.org
East End School	170 Oneida Avenue, North Plainfield, NJ 07060	NJ	28.71	Municipal	Roof	11/12/2013 Own, Manage, Operate & Maintain	North Plainfield Board of Education	Don Sternberg	don_sternberg@nplainfield.org
West End School	447 Green Brook Road, North Plainfield, NJ 07060	NJ	44.66	Municipal	Roof	4/15/2013 Own, Manage, Operate & Maintain	North Plainfield Board of Education	Don Sternberg	don_sternberg@nplainfield.org
TD Bank Ballpark	1 Patriots Park, Bridgewater, NJ 08807	NJ	1,004.85	Municipal	Carport	9/23/2013 Own, Manage, Operate & Maintain	Somerset Patriots Baseball Club	Ron Schulz	rschulz@somersetpatriots.com
Somerset County Municipal Parking Garage	20 Grove Street, Somerville, NJ 08876	NJ	322.00	Municipal	Carport	9/30/2013 Own, Manage, Operate & Maintain	County of Somerset	Denyse Rorke	drorke@avidxchange.com
Bridgewater Central Maintenance	750 East Main Street, Bridgewater, NJ 08807	NJ	209.30	Municipal	Carport	3/6/2013 Own, Manage, Operate & Maintain	County of Somerset	Denyse Rorke	drorke@avidxchange.com
Somerset County Joint Public Works Building 1	411 Chimney Rock Road, Bridgewater, NJ 08807	NJ	171.81	Municipal	Roof	4/12/2013 Own, Manage, Operate & Maintain	County of Somerset	Denyse Rorke	drorke@avidxchange.com
Somerset County Joint Public Works Building 2	411 Chimney Rock Road, Bridgewater, NJ 08807	NJ	112.70	Municipal	Roof	4/12/2013 Own, Manage, Operate & Maintain	County of Somerset	Denyse Rorke	drorke@avidxchange.com
Somerset County Environmental Education Center	190 Lord Stirling Road, Basking Ridge, NJ 07920	NJ	41.86	Municipal	Roof	12/6/2012 Own, Manage, Operate & Maintain	County of Somerset	Denyse Rorke	drorke@avidxchange.com
Somerset County Vocational and Technical High School Building A	14 Vogt Drive, Bridgewater, NJ 08807	NJ	66.99	Municipal	Roof	9/17/2013 Own, Manage, Operate & Maintain	Somerset County Vocational Board of Education	Richard D'Alessandro	rdalessandro@scvts.net
Somerset County Vocational and Technical High School Building B (Phase 1)	14 Vogt Drive, Bridgewater, NJ 08807	NJ	86.13	Municipal	Roof	9/17/2013 Own, Manage, Operate & Maintain	Somerset County Vocational Board of Education	Richard D'Alessandro	rdalessandro@scvts.net
Somerset County Vocational and Technical High School Building B (Phase 2)	14 Vogt Drive, Bridgewater, NJ 08807	NJ	612.48	Municipal	Carport	9/17/2013 Own, Manage, Operate & Maintain	Somerset County Vocational Board of Education	Richard D'Alessandro	rdalessandro@scvts.net
Somerset County Vocational and Technical High School Building F	14 Vogt Drive, Bridgewater, NJ 08807	NJ	70.18	Municipal	Roof	9/17/2013 Own, Manage, Operate & Maintain	Somerset County Vocational Board of Education	Richard D'Alessandro	rdalessandro@scvts.net
Angelo Tomaso Elementary School	45 Washington Valley Road, Warren, NJ 07059	NJ	191.40	Municipal	Roof	12/19/2012 Own, Manage, Operate & Maintain	Warren Township Board of Education	Patricia Leonhardt	pleonhardt@warrentboe.org
Warren Central Elementary School	109 Mt. Bethel Road, Warren, NJ 07059	NJ	51.04	Municipal	Roof	1/22/2013 Own, Manage, Operate & Maintain	Warren Township Board of Education	Patricia Leonhardt	pleonhardt@warrentboe.org
Warren Middle School	100 Old Stirling Road, Warren, NJ 07059	NJ	363.66	Municipal	Roof	1/22/2013 Own, Manage, Operate & Maintain	Warren Township Board of Education	Patricia Leonhardt	pleonhardt@warrentboe.org
Bayberry Elementary School (Phase 1)	113 Bayberry Lane, Watchung, NJ 07069	NJ	63.80	Municipal	Roof	4/2/2013 Own, Manage, Operate & Maintain	Watchung Borough School District	Charisse Gutierrez	cgutierrez@watchungschools.us
Bayberry Elementary School (Phase 2)	113 Bayberry Lane, Watchung, NJ 07069	NJ	111.65	Municipal	Carport	4/2/2013 Own, Manage, Operate & Maintain	Watchung Borough School District	Charisse Gutierrez	cgutierrez@watchungschools.us
County College of Morris (Parking Lots 7 and 8)	214 Centre Grove Rd, Randolph, NJ 07869	NJ	1,934.57	Municipal	Carport	11/6/2013 Own, Manage, Operate & Maintain	County College of Morris	Karen VanDerhoof	kvanderhoof@ccm.edu
County College of Morris (Parking Lot 2)	214 Centre Grove Rd, Randolph, NJ 07869	NJ	637.23	Municipal	Carport	11/6/2013 Own, Manage, Operate & Maintain	County College of Morris	Karen VanDerhoof	kvanderhoof@ccm.edu
County College of Morris (Parking Lot 5)	214 Centre Grove Rd, Randolph, NJ 07869	NJ	362.34	Municipal	Carport	11/6/2013 Own, Manage, Operate & Maintain	County College of Morris	Karen VanDerhoof	kvanderhoof@ccm.edu
County College of Morris (Parking Lot 6)	214 Centre Grove Rd, Randolph, NJ 07869	NJ	401.06	Municipal	Carport	11/6/2013 Own, Manage, Operate & Maintain	County College of Morris	Karen VanDerhoof	kvanderhoof@ccm.edu
County College of Morris (Student Center)	214 Centre Grove Rd, Randolph, NJ 07869	NJ	107.09	Municipal	Roof	11/6/2013 Own, Manage, Operate & Maintain	County College of Morris	Karen VanDerhoof	kvanderhoof@ccm.edu
Dickerson School	250 Route 24, Chester, NJ 07930	NJ	70.18	Municipal	Roof	3/4/2013 Own, Manage, Operate & Maintain	Chester School District	Melissa Simmons	melissa.simmons@chester-nj.org
Bragg Intermediate School	250 Route 24, Chester, NJ 07930	NJ	242.44	Municipal	Ground	11/6/2013 Own, Manage, Operate & Maintain	Chester School District	Melissa Simmons	melissa.simmons@chester-nj.org
Black River Middle School	133 North Road, Chester, NJ 07930	NJ	354.09	Municipal	Ground	11/6/2013 Own, Manage, Operate & Maintain	Chester School District	Melissa Simmons	melissa.simmons@chester-nj.org
Pearl R. Miller Middle School	117 Kiel Ave, Kinnelon, NJ 07405	NJ	89.32	Municipal	Roof	2/26/2013 Own, Manage, Operate & Maintain	Kinnelon School District	Phyllis Butkovich	butkovichp@kinnelon.org
Stonybrook Elementary School	118 Boonton Ave, Kinnelon, NJ 07405	NJ	92.51	Municipal	Roof	2/26/2013 Own, Manage, Operate & Maintain	Kinnelon School District	Phyllis Butkovich	butkovichp@kinnelon.org
Canfield Avenue Elementary School	42 Canfield Avenue, Mine Hill, NJ 07803	NJ	73.37	Municipal	Roof	1/28/2013 Own, Manage, Operate & Maintain	Mine Hill Board of Education	Carolina Rodriguez	crodriguez@minehillcas.org
Randolph High School (Phase 1)	25 School House Road, Randolph, NJ 07869	NJ	197.78	Municipal	Roof	2/4/2013 Own, Manage, Operate & Maintain	Randolph Township Schools	Lulzime Feti	lfeti@rtnj.org
Randolph High School (Phase 1)	25 School House Road, Randolph, NJ 07869	NJ	391.22	Municipal	Carport	2/4/2013 Own, Manage, Operate & Maintain	Randolph Township Schools	Lulzime Feti	lfeti@rtnj.org
Randolph Middle School (Phase 1)	507 Millbrook Ave, Randolph, NJ 07869	NJ	86.13	Municipal	Roof	2/4/2013 Own, Manage, Operate & Maintain	Randolph Township Schools	Lulzime Feti	lfeti@rtnj.org
Randolph Middle School (Phase 2)	507 Millbrook Ave, Randolph, NJ 07869	NJ	125.57	Municipal	Ground	2/4/2013 Own, Manage, Operate & Maintain	Randolph Township Schools	Lulzime Feti	lfeti@rtnj.org
Ironia School	513 Dover Chester Rd., Randolph, NJ 07869	NJ	86.13	Municipal	Roof	2/4/2013 Own, Manage, Operate & Maintain	Randolph Township Schools	Lulzime Feti	lfeti@rtnj.org
Montville High School	100 Horseneck Rd, Montville, NJ 07045	NJ	82.94	Municipal	Roof	4/12/2013 Own, Manage, Operate & Maintain	Montville Township Board of Education	Liliana Villareal	liliana.villareal@montville.net
Lazar Middle School	123 Changebridge Rd, Montville, NJ 07045	NJ	73.37	Municipal	Roof	4/12/2013 Own, Manage, Operate & Maintain	Montville Township Board of Education	Liliana Villareal	liliana.villareal@montville.net
Morris Knolls High School	50 Knoll Drive, Rockaway, NJ 07866	NJ	144.98	Municipal	Roof	4/8/2013 Own, Manage, Operate & Maintain	Morris Hills Regional School District	Dee Abbate-Fetzer	dabbate@mhrd.org
Franklin Elementary School (Phase 1)	50 Washington Ave, Franklin, NJ 07416	NJ	68.15	Municipal	Roof	8/20/2013 Own, Manage, Operate & Maintain	Franklin Borough Board of Education	Bill Sabo	bsabo@fboe.org
Franklin Elementary School (Phase 2)	50 Washington Ave, Franklin, NJ 07416	NJ	151.03	Municipal	Carport	8/20/2013 Own, Manage, Operate & Maintain	Franklin Borough Board of Education	Bill Sabo	bsabo@fboe.org
Byram Elementary School (Phase 1)	11 Mansfield Dr, Stanhope, NJ 07874	NJ	38.94	Municipal	Roof	4/8/2013 Own, Manage, Operate & Maintain	Byram Township School District	Alice Bresett	bresett.alice@byramschools.org
Byram Elementary School (Phase 2)	11 Mansfield Dr, Stanhope, NJ 07874	NJ	485.82	Municipal	Carport	4/8/2013 Own, Manage, Operate & Maintain	Byram Township School District	Alice Bresett	bresett.alice@byramschools.org
Frankford Township Elementary School	2 Pines Rd, Branchville, NJ 07826	NJ	306.24	Municipal	Ground	10/1/2013 Own, Manage, Operate & Maintain	Frankford Township School District	Jody McIntyre	mcintyrej@frankfordschool.org
Kittatinny Regional High School (Phase 1)	77 Halsey Rd, Newton, NJ 07860	NJ	303.05	Municipal	Carport	5/10/2013 Own, Manage, Operate & Maintain	Kittatinny Regional School District	Kathy Kane	kkane@krhs.net
Fredon Civic Center	436 Rte 94, Fredon, NJ 07860	NJ	33.93	Municipal	Roof	12/20/2012 Own, Manage, Operate & Maintain	Town of Fredon	Joanne Charner	fredonclerk@embarqmail.com
High Point Regional High School	299 Pidgeon Hill Rd, Sussex, NJ 07461	NJ	264.77	Municipal	Roof	2/7/2013 Own, Manage, Operate & Maintain	High Point Regional Board of Education	Dawn Heller	dheller@hpregional.org
Newton DPW	117 Moran St, Newton, NJ 07860	NJ	39.33	Municipal	Roof	12/28/2012 Own, Manage, Operate & Maintain	Town of Newton	Tom Russo	trusso@newtontownhall.com

Newton Wastewater Treatment Plant	35 Townsend St, Newton, NJ 07860	NJ	66.99	Municipal	Ground	5/10/2013	Own, Manage, Operate & Maintain	Town of Newton	Tom Russo	trusso@newtontownhall.com
Merriam Avenue Elementary School (Phase 1)	81 Merriam Ave, Newton, NJ 07860	NJ	113.58	Municipal	Roof	2/27/2013	Own, Manage, Operate & Maintain	Newton Board of Education	Donna Snyder	dsnyder@newtonnj.org
Merriam Avenue Elementary School (Phase 2)	81 Merriam Ave, Newton, NJ 07860	NJ	178.64	Municipal	Carport	2/27/2013	Own, Manage, Operate & Maintain	Newton Board of Education	Donna Snyder	dsnyder@newtonnj.org
Newton High School	44 Ryerson Ave, Newton, NJ 07860	NJ	127.60	Municipal	Roof	4/28/2013	Own, Manage, Operate & Maintain	Newton Board of Education	Donna Snyder	dsnyder@newtonnj.org
Wheatsworth Facility	149 Wheatsworth Rd, Hardyston, NJ 07419	NJ	92.51	Municipal	Ground	3/4/2013	Own, Manage, Operate & Maintain	County of Sussex	Denyse Rorke	drorke@avidxchange.com
Sussex County Community College Building L	One College Hill Road, Newton, NJ 07860	NJ	363.66	Municipal	Carport	8/30/2013	Own, Manage, Operate & Maintain	Sussex County Community College	Tracey Bouma	tbouma@sussex.edu
Sussex County Community College Building E (Phase 1)	One College Hill Road, Newton, NJ 07860	NJ	123.32	Municipal	Carport	8/30/2013	Own, Manage, Operate & Maintain	Sussex County Community College	Tracey Bouma	tbouma@sussex.edu
Sussex County Community College Building E (Phase 2)	One College Hill Road, Newton, NJ 07860	NJ	108.46	Municipal	Ground	8/30/2013	Own, Manage, Operate & Maintain	Sussex County Community College	Tracey Bouma	tbouma@sussex.edu
Sussex County Community College Building D	One College Hill Road, Newton, NJ 07860	NJ	202.68	Municipal	Carport	8/30/2013	Own, Manage, Operate & Maintain	Sussex County Community College	Tracey Bouma	tbouma@sussex.edu
Sussex County Community College Buildings B and C	One College Hill Road, Newton, NJ 07860	NJ	306.24	Municipal	Ground	9/4/2013	Own, Manage, Operate & Maintain	Sussex County Community College	Tracey Bouma	tbouma@sussex.edu
Mercer County Community College	1200 Old Trenton Road, West Windsor, NJ 08550	NJ	8,255.52	Municipal	Ground	9/18/2013	Own, Manage, Operate & Maintain	Mercer County Community College	Bryon Marshall	marshalb@mccc.edu
Westminster Solar	339 S. Ashburnham Rd, Westminster, MA 01473	MA	567.84	Municipal	Ground	exp. 4/2016	Own, Manage, Operate & Maintain	1) Ashburnham Westminster Regional School District,	Ralph E. Hicks	TBD
Clarksburg Solar	650 W Cross Rd, Clarksburg, MA 01247	MA	653.70	Municipal	Ground	exp. 5/2016	Own, Manage, Operate & Maintain	South Berkshire Regional School District	Bruce C. Turner	TBD
Total kW completed or purchased:			32,837.05							

PROJECTS CURRENTLY UNDER CONSTRUCTION

Kittatinny Regional High School (Phase 2)	77 Halsey Rd, Newton, NJ 07860	NJ	397.65	Municipal	Roof	exp. 8/2016	WILL Own, Manage, Operate & Maintain	Kittatinny Regional School District	TBD	TBD
Sparta Middle School	350 Main St, Sparta Township, NJ 07871	NJ	484.11	Municipal	Ground	exp. 8/2016	WILL Own, Manage, Operate & Maintain	Sparta Township School District	TBD	TBD
Hardyston Middle School	183 Wheatsworth Rd, Hamburg, NJ 07419	NJ	870.59	Municipal	Ground	exp. 8/2016	WILL Own, Manage, Operate & Maintain	Hardyston Township Public School District	TBD	TBD
Sussex County Technical School (Phase 1)	105 N Church Rd, Sparta Township, NJ 07871	NJ	76.56	Municipal	Roof	exp. 8/2016	WILL Own, Manage, Operate & Maintain	Sussex County Technical School	TBD	TBD
Sussex County Technical School (Phase 2)	105 N Church Rd, Sparta Township, NJ 07871	NJ	577.61	Municipal	Ground	exp. 8/2016	WILL Own, Manage, Operate & Maintain	Sussex County Technical School	TBD	TBD
Sussex County Technical School (Phase 3)	105 N Church Rd, Sparta Township, NJ 07871	NJ	248.82	Municipal	Ground	exp. 8/2016	WILL Own, Manage, Operate & Maintain	Sussex County Technical School	TBD	TBD
Valley Road School	24 Valley Rd, Stanhope, NJ 07874	NJ	251.66	Municipal	Roof	exp. 8/2016	WILL Own, Manage, Operate & Maintain	Stanhope School District	TBD	TBD
Long Valley Middle School	51 W Mill Rd, Long Valley, NJ 07853	NJ	424.70	Municipal	Ground	exp. 9/2016	WILL Own, Manage, Operate & Maintain	Washington Township Schools	TBD	TBD
Benedict A. Cucinella School	470 Naughright Rd, Long Valley, NJ 07853	NJ	190.96	Municipal	Roof	exp. 9/2016	WILL Own, Manage, Operate & Maintain	Washington Township Schools	TBD	TBD
Chatham High School	255 Lafayette Ave, Chatham Township, NJ 07928	NJ	214.83	Municipal	Roof	exp. 9/2016	WILL Own, Manage, Operate & Maintain	School District of the Chathams	TBD	TBD
Chester Township Municipal Building (Phase 1)	1 Parker Road, Chester, NJ 07930	NJ	98.89	Municipal	Ground	exp. 9/2016	WILL Own, Manage, Operate & Maintain	Township of Chester	TBD	TBD
Chester Township Municipal Building (Phase 2)	1 Parker Road, Chester, NJ 07930	NJ	71.60	Municipal	Ground	exp. 9/2016	WILL Own, Manage, Operate & Maintain	Township of Chester	TBD	TBD
Morris County Library (Phase 1)	30 East Hanover Ave, Whippany, NJ 07981	NJ	180.73	Municipal	Roof	exp. 9/2016	WILL Own, Manage, Operate & Maintain	County of Morris	TBD	TBD
Morris County Library (Phase 2)	30 East Hanover Ave, Whippany, NJ 07981	NJ	150.04	Municipal	Carport	exp. 9/2016	WILL Own, Manage, Operate & Maintain	County of Morris	TBD	TBD
Morris County Library (Phase 3)	30 East Hanover Ave, Whippany, NJ 07981	NJ	211.42	Municipal	Carport	exp. 9/2016	WILL Own, Manage, Operate & Maintain	County of Morris	TBD	TBD
Morris County Office of Temporary Assistance	340 W. Hanover Ave Morristown, NJ 07960	NJ	477.40	Municipal	Ground	exp. 9/2016	WILL Own, Manage, Operate & Maintain	County of Morris	TBD	TBD
Morris County Public Safety Training Academy (Phase 1)	500 W Hanover Ave, Morristown, NJ 07960	NJ	35.34	Municipal	Roof	exp. 9/2016	WILL Own, Manage, Operate & Maintain	County of Morris	TBD	TBD
Morris County Public Safety Training Academy (Phase 2)	500 W Hanover Ave, Morristown, NJ 07960	NJ	306.90	Municipal	Carport	exp. 9/2016	WILL Own, Manage, Operate & Maintain	County of Morris	TBD	TBD
Morris County Public Safety Training Academy (Phase 3)	500 W Hanover Ave, Morristown, NJ 07960	NJ	112.53	Municipal	Roof	exp. 9/2016	WILL Own, Manage, Operate & Maintain	County of Morris	TBD	TBD
Sandshore Elementary School	498 Sand Shore Rd, Budd Lake, NJ 07828	NJ	214.83	Municipal	Ground	exp. 9/2016	WILL Own, Manage, Operate & Maintain	Mount Olive School District	TBD	TBD
Tinc Road School	24 Tinc Rd, Flanders, NJ 07836	NJ	232.50	Municipal	Ground	exp. 9/2016	WILL Own, Manage, Operate & Maintain	Mount Olive School District	TBD	TBD
Bridgewater Township Municipal Building / Police Station	100 Commons Way Bridgewater, NJ 08807	NJ	319.00	Municipal	Ground	exp. 10/2016	WILL Own, Manage, Operate & Maintain	County of Somerset	TBD	TBD
Warren Township DPW	1 Bardy Rd, Warren, NJ 07059	NJ	28.71	Municipal	Roof	exp. 10/2016	WILL Own, Manage, Operate & Maintain	Township of Warren	TBD	TBD
0 Putnam Pike	0 Putnam Pike Glocester, RI 02814	RI	248.82	TBD	Ground	6/16/2016		TBD	TBD	TBD
Off Cucumber Hill Road (AP 7 Lot 20E)	Off Cucumber Hill Road Foster, RI 02825	RI	652.50	TBD	Ground	6/26/2016		TBD	TBD	TBD
675 Plainfield Pike	675 Plainfield Pike Coventry, RI 02827	RI	248.82	TBD	Ground	6/23/2016		TBD	TBD	TBD
21 Briggs Road	21 Briggs Road Foster, RI 02825	RI	652.50	TBD	Ground	6/23/2016		TBD	TBD	TBD
Total kW under construction:			7,980.02							
Total kW completed or contracted:			40,817.07							

Management Staff -- Financial

Stacey Hughes (shughes@sunlightgeneral.com) was previously a Managing Director of Société Générale, in charge of interest rate and currency derivative solutions for corporate clients in North and South America (1998 - 2009). Ms. Hughes has extensive experience structuring sophisticated financial transactions, particularly within the project finance and infrastructure space. Previously, Ms. Hughes worked in the Capital Markets and Financial Institutions groups at Salomon Brothers. She has a B.S. in Finance from California Polytechnic State University and an MBA from Harvard Business School.

Edouard Klehe (eklehe@ sunlightgeneral.com) was previously a Managing Director of Société Générale, where he ran the Structured Credit and Principal Finance group. Mr. Klehe has more than 10 years of experience working in various senior trading, investment and structuring roles, where he developed extensive expertise in structuring financial investments both for the bank's own account and for its customers. In addition, he has managed portfolios of corporate and project finance bonds, asset-backed securities, and alternative investments. He received a Master's degree from H.E.C. School of Management in Paris.

Bill Zachary (bzachary@ sunlightgeneral.com) was previously a Managing Director of Société Générale, where he ran the Municipal Finance Group. Mr. Zachary has nearly eighteen years of experience structuring municipal transactions, including approximately $1.5 billion in privatized military housing privatizations, highly complex tax-exempt natural gas pre-pay financings, and a wide variety of derivative transactions. Before joining Société Générale in 1993, Mr. Zachary worked in the Public Finance Department at Smith Barney. He has a B.A. from Harvard College and attended the Kennedy School of Government of Harvard University.

Management Staff -- Engineering

Peter Dubro (pdubro@sunlightgeneral.com), our Director of Projects and Engineering Manager, was previously a Senior Project Design Engineer at Uni-Solar and a Senior Energy Engineer at Solar Design Associates. He has more approximately ten years of experience in the photovoltaic industry. He has served as engineering lead and project manager on projects utilizing a variety of technologies including thin film and crystalline in-ground, ballasted rooftop, custom canopy, and architectural integrated applications. He is experienced in large and small-scale on and off-grid photovoltaic design and application as well as extensive experience in site evaluation, data acquisition, and commissioning. He holds a BS in Electrical Engineering from Rensselaer Polytechnic Institute, a MS in Energy Engineering from the University of Massachusetts, and is a licensed Professional Engineer in the state of NJ.

Stephen Schneider (sschneider@sunlightgeneral.com), our Operations Manager, was previously Director of Operations at Pfister Energy, a New Jersey based solar integrator. He has seven years of experience with a variety of innovative renewable energy projects including participation in over 15 MW of solar installations. He has held leadership positions in Business Development, Project Engineering and Management, and Operations and Maintenance. Stephen has worked with a number of leading commercial, institutional and governmental clients in order to develop, deliver and maintain solar projects. Prior to entering the solar industry, Stephen spent over ten years in the finance and construction industries. He holds a BS in Electronic Engineering and an MBA, both from Monmouth University, and is a NABCEP Certified Solar PV Installer.

NextPath Experience

John DiBari (John.DiBari@nextpathfinance.com) has extensive experience in structuring complicated financial transactions including solar, public-private partnerships and real estate transactions. He has raised over $2 billion to support projects that allow municipal, state and federal governmental organizations to lower their costs or improve their services. Previously, Mr. DiBari lead transaction finance and FP&A for Corvias Group, which partners with governmental organizations to create innovative public-private partnerships. DiBari holds an MBA from the Franklin W. Olin Graduate School of Business at Babson College, as well as a Bachelor of Arts in Psychology from Hobart and William Smith Colleges. DiBari serves as a board member and Treasurer for the Aquidneck Island Planning Commission.

Debbie Amarant (Debbie.Amarant@nextpathfinance.com) was previously a Vice President of Goldman Sachs. With over ten years of experience holding various trading and operations roles, she has extensive experience in securities finance transactions. As senior trader of Securities Lending she oversaw lending of securities to all major New York and London based broker-dealers specializing in US markets (2002-2012). Previously, Mrs. Amarant worked in the Interest Rate Derivatives group at AIG International. She has a B.S from Roanoke College and holds a Rhode Island Real Estate Salesperson License.

US SolarWorks

Pete Fine, the President of US SolarWorks, holds full NABCEP certification for Solar PV design and installation and has numerous solar array designs & installs to his credit. His work has been approved by five MA energy agencies, two Federal agencies, the RI Energy Commission, and Commerce RI, amongst others. He has served as solar consultant for City of Providence Water Dept. and for the RI Attorney General's office.

Prior to founding US SolarWorks, his personal work experience included R&D at National Semiconductor in Santa Clara, CA, engineering work at SJSU Semiconductor Labs in San Jose, CA, and software development at NASA Jet Propulsion Labs in Pasadena, CA. He is also a registered US Patent Agent with 10 years patent and IP work, licensed to write and defend US Patent Applications. Prior work from 1980 – 1995 included creating and operating Pacific Pure Water Systems, which specialized in designing and installing water treatment systems for commercial sites such as hotels and restaurants.

Mr. Fine has a degree in Chemistry from University of California, with graduate work in Materials Engineering specializing in electronic properties of materials. He is a RI Registered Contractor with RI Solar Renewable Energy Professional Certification, REPC-109 and RI Contractor License #38450. He also holds a Massachusetts Construction Supervisor License.

LENGTH OF TIME QUAHOG HAS PROVIDED THESES SERVICES

Although Quahog is a recently-formed entity, SunLight General Capital has been exclusively a solar developer since 2009, during which time we've deployed approximately $225 million and have developed or are currently developing more than 40 MW of solar projects.

LIST OF SUBCONTRACTORS

Quahog has identified US Solar as our preferred contractor, and they've expressed a strong interest in working with us on this Project based on the preliminary information we had available. US Solar, headquartered in Attleboro, MA, has an impressive background in building PV systems and we have included information about them in our proposal. If selected by the Towns, Quahog would immediately begin working with them to finalize a contract and other critical details. In the unlikely event that Quahog and US Solar were unable to come to final terms, we would quickly identify another contractor with the Rhode Island General Contractor's License as required by the Towns.

COPY OF RI GENERAL CONTRACTOR'S LICENSE

Provided on the following page is a copy of US Solar's RI General Contractor's License.

Massachusetts - Department of Public Safety
Board of Building Regulations and Standards
Construction Supervisor
License: **CS-108345**

PETER FINE
7 N.MAIN STREET
Attleboro MA 02703

Commissioner

Expiration
12/22/2018

STATE OF RHODE ISLAND
CONTRACTORS' REGISTRATION
AND LICENSING BOARD

REGISTRATION NO 38450 EXP. DATE 12/1/15

REGISTRANT'S NAME
US SOLARWORKS, LLC

AUTHORIZED REPRESENTATIVE
PETER FINE

DRIVER'S LICENSE #
MA S19598008

EXECUTIVE DIRECTOR

State of Rhode Island and Providence Plantations
Rhode Island Department of Labor and Training

US SOLARWORKS LLC
SOLAR THERMAL PROFESS STP00109

PETER E FINE
8 SMITH STREET
REHOBOTH MA 02769

JOHN SHAW
Administrator

12/31/2016
Expiration Date

State of Rhode Island and Providence Plantations
Rhode Island Department of Labor and Training

RENEWABLE ENERGY PROF REPC-109

PETER E FINE
8 SMITH STREET
REHOBOTH MA 02769

JOHN SHAW
Administrator

12/31/2016
Expiration Date

SPECIFICATION SHEETS OF PROPOSED PV EQUIPMENT

Provided on the following pages are specification sheets for the equipment that Quahog is proposing to use for the Towns' projects. We've also provided a more detailed technical write-up, including preliminary drawings for our proposed sites, in an appendix to our response.

CanadianSolar

DOUBLE-GLASS MODULE

DYMOND CS6X-315/320/325P-FG

Canadian Solar's Dymond CS6X-P-FG module is a 72 cell double-glass module. By replacing the traditional polymer backsheet with heat-strengthened glass, the Dymond module has a lower annual power degradation than a traditional module and better protection against the elements, making it more reliable and durable during its lifetime.

KEY FEATURES

Anti-PID module

Lower annual power degradation & more system power yield over lifetime
- First year annual degradation 2.5 %, each subsequent year 0.5 %
- 85.5 % power output at year 25
- 83 % power output at year 30

Better fire protecting performance
- Fire class A certified according to fire test IEC 61730-2 / MST 23
- Certified for fire Type 3 / Type 13 according to UL 1703

Designed for high voltage systems of up to 1500 V_{DC}, saving BoS costs

Sea/waterside PV system installation
- Glass backside blocks moisture permeability
- No module-level corrosion

5400 Pa snow load, 2400 Pa wind load

MANAGEMENT SYSTEM CERTIFICATES*

ISO 9001:2008 / Quality management system
ISO/TS 16949:2009 / The automotive industry quality management system
ISO 14001:2004 / Standards for environmental management system
OHSAS 18001:2007 / International standards for occupational health & safety

PRODUCT CERTIFICATES*

IEC 61215 / IEC 61730: VDE / CE / MCS
UL 1703 / IEC 61215 performance: CEC listed (US)
UL 1703: CSA / Take-e-way

* As there are different certification requirements in different markets, please contact your local Canadian Solar sales representative for the specific certificates applicable to the products in the region in which the products are to be used.

CANADIAN SOLAR INC. is committed to providing high quality solar products, solar system solutions and services to customers around the world. As a leading manufacturer of solar modules and PV project developer with about 13 GW of premium quality modules deployed around the world since 2001, Canadian Solar Inc. (NASDAQ: CSIQ) is one of the most bankable solar companies worldwide.

CANADIAN SOLAR INC.
545 Speedvale Avenue West, Guelph, Ontario N1K 1E6, Canada, www.canadiansolar.com, support@canadiansolar.com

ENGINEERING DRAWING (mm)

Rear View

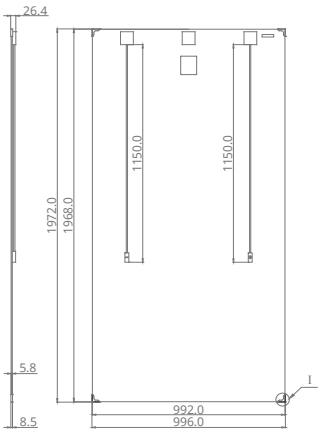

Corner Protector Detail

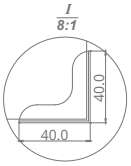

CS6X-320P-FG / I-V CURVES

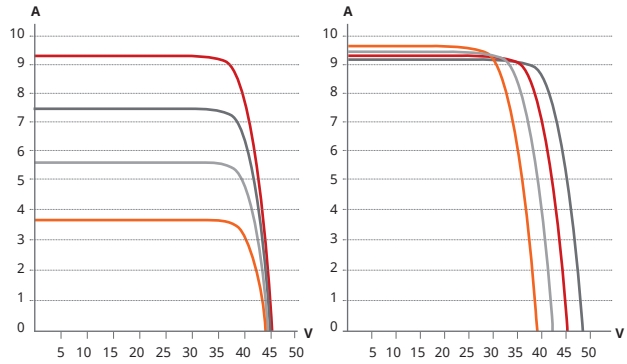

ELECTRICAL DATA / STC*

CS6X	315P-FG	320P-FG	325P-FG
Nominal Max. Power (Pmax)	315 W	320 W	325 W
Opt. Operating Voltage (Vmp)	36.6 V	36.8 V	37.0 V
Opt. Operating Current (Imp)	8.61 A	8.69 A	8.78 A
Open Circuit Voltage (Voc)	45.1 V	45.3 V	45.5 V
Short Circuit Current (Isc)	9.18 A	9.26 A	9.34 A
Module Efficiency	16.14 %	16.39 %	16.65 %
Operating Temperature	-40°C ~ +85°C		
Max. System Voltage	1500 (IEC) or 1000 V (UL)		
Module Fire Performance	Type 3 / Type 13 (UL 1703) or CLASS A (IEC 61730)		
Max. Series Fuse Rating	15 A		
Application Classification	Class A		
Power Tolerance	0 ~ + 5 W		

* Under Standard Test Conditions (STC) of irradiance of 1000 W/m², spectrum AM 1.5 and cell temperature of 25°C.

ELECTRICAL DATA / NOCT*

CS6X	315P-FG	320P-FG	325P-FG
Nominal Max. Power (Pmax)	228 W	232 W	236 W
Opt. Operating Voltage (Vmp)	33.4 V	33.6 V	33.7 V
Opt. Operating Current (Imp)	6.84 A	6.91 A	6.98 A
Open Circuit Voltage (Voc)	41.5 V	41.6 V	41.8 V
Short Circuit Current (Isc)	7.44 A	7.50 A	7.57 A

* Under Nominal Operating Cell Temperature (NOCT), irradiance of 800 W/m², spectrum AM 1.5, ambient temperature 20°C, wind speed 1 m/s.

MECHANICAL DATA

Specification	Data
Cell Type	Poly-crystalline, 6 inch
Cell Arrangement	72 (6×12)
Dimensions	1968×992×5.8mm (77.5×39.1×0.23 in) without J-Box and corner protector
(Incl. corner protector)	1972×996×8.5 mm (77.6×39.2×0.33 in) without J-Box
Weight	27.5 kg (60.6 lbs)
Front Cover	2.5 mm heat strengthened glass
Back Glass	2.5 mm heat strengthened glass
Frame	Frameless
J-Box	Split J-Box, IP67, 3 diodes
Cable	4 mm² (IEC) or 4 mm² &12 AWG 1000 V (UL)
Cable Length	1150 mm (45.3 in), 500 mm (19.7 in) (+) and 350 mm (13.8 in) (-) is optional for portrait installation*
Connectors	Amphenol H4 UTX (IEC), Renhe 05-6 (UL)
Standard Packaging	30 pieces, 900 kg (1984.1 lbs) (quantity & weight per pallet)
Module Pieces per Container	660 pieces (40' HQ)

* The application of this short length cable can only be used in portrait installation (clamping mounting method) systems in which the distance between modules should be less than or equal to 50 mm. In the event the distance between the PV modules to be installed is more than 50 mm, please make sure to consult our technical team for evaluation and advice.

PERFORMANCE AT LOW IRRADIANCE

Industry leading performance at low irradiance, average relative efficiency of 96.0 % from an irradiance of 1000 W/m² to 200 W/m² (AM 1.5, 25°C).

TEMPERATURE CHARACTERISTICS

Specification	Data
Temperature Coefficient (Pmax)	-0.41 % / °C
Temperature Coefficient (Voc)	-0.31 % / °C
Temperature Coefficient (Isc)	0.053 % / °C
Nominal Operating Cell Temperature	45±2 °C

The specification and key features described in this datasheet may deviate slightly and are not guaranteed. Due to on-going innovation, research and product enhancement, Canadian Solar Inc. reserves the right to make any adjustment to the information described herein at any time without notice. Please always obtain the most recent version of the datasheet which shall be duly incorporated into the binding contract made by the parties governing all transactions related to the purchase and sale of the products described herein.

Caution: For professional use only. The installation and handling of PV modules requires professional skills and should only be performed by qualified professionals. Please read the safety and installation instructions before using the modules.

PARTNER SECTION

CANADIAN SOLAR INC. Feb. 2016. All rights reserved, PV Module Product Datasheet V5.4_EN

INVERTERS

SolarEdge Three Phase Inverters for the 277/480V Grid for North America

SE10KUS / SE20KUS / SE33.3KUS

The best choice for SolarEdge enabled systems

- Integrated arc fault protection for NEC 2011 690.11
- Rapid shutdown for NEC 2014 690.12
- Superior efficiency (98.5%)
- Outdoor and indoor installation
- Built-in module-level monitoring
- Internet connection through Ethernet or Wireless
- Small, lightweight and easy to install on provided bracket
- Fixed voltage inverter, DC/AC conversion only
- Integrated Safety Switch and DC fuses (plus & minus)

Three Phase Inverters for the 277/480V Grid for North America

SE10KUS / SE20KUS / SE33.3KUS[1]

	SE10KUS	SE20KUS	SE33.3KUS	
OUTPUT				
Rated AC Power Output	10000	20000	33300	VA
Maximum AC Power Output	10000	20000	33300	VA
AC Output Line Connections	4-wire WYE (L1-L2-L3-N) plus PE			
AC Output Voltage Minimum-Nominal-Maximum[2] (L-N)	244-277-305			Vac
AC Output Voltage Minimum-Nominal-Maximum[2] (L-L)	422.5-480-529			Vac
AC Frequency Min-Nom-Max[2]	59.3 - 60 - 60.5			Hz
Max. Continuous Output Current (per Phase)	12	24	40	A
GFDI Threshold	1			A
Utility Monitoring, Islanding Protection, Country Configurable Set Points	Yes			
INPUT				
Maximum DC Power (Module STC)	13500	27000	45000	W
Transformer-less, Ungrounded	Yes			
Maximum Input Voltage DC to Gnd	490			Vdc
Maximum Input Voltage DC+ to DC-	980			Vdc
Nominal Input Voltage DC to Gnd	425			Vdc
Nominal Input Voltage DC+ to DC-	850			Vdc
Maximum Input Current	13.5	26.5	40	Adc
Max. Input Short Circuit Current	45			Adc
Reverse-Polarity Protection	Yes			
Ground-Fault Isolation Detection	1MΩ Sensitivity			
CEC Weighted Effciency	98		98.5	%
Night-time Power Consumption	< 3		< 4	W
ADDITIONAL FEATURES				
Supported Communication Interfaces	RS485, Ethernet, ZigBee (optional)			
Rapid Shutdown – NEC 2014 690.12	With installation of rapid shutdown kit[3]			
STANDARD COMPLIANCE				
Safety	UL1741, UL1699B, UL1998, CSA 22.2			
Grid Connection Standards	IEEE1547			
Emissions	FCC part15 class B			
INSTALLATION SPECIFICATIONS				
AC output conduit size / AWG range	3/4" minimum / 12-6 AWG			
DC input conduit size / AWG range	3/4" minimum / 12-6 AWG			
Number of DC inputs	2 pairs		3 pairs (with fuses on plus & minus)[4]	
Dimensions (HxWxD)	21 x 12.5 x 10.5 / 540 x 315 x 260			in/mm
Dimensions with Safety Switch (HxWxD)	30.5 x 12.5 x 10.5 / 775 x 315 x 260			in/mm
Weight	73.2 / 33.2		99.5 / 45	lb/kg
Weight with Safety Switch	79.7 / 36.2		106 / 48	lb/kg
Cooling	Fans (user replaceable)			
Noise	< 50		< 55	dBA
Operating Temperature Range	-40 to +140 / -40 to +60			˚F/˚C
Protection Rating	NEMA 3R			

(1) For 208V inverters refer to: http://www.solaredge.com/files/pdfs/products/inverters/se-three-phase-us-inverter-208V-datasheet.pdf
(2) For other regional settings please contact SolarEdge support.
(3) Rapid shutdown kit P/N: contact SolarEdge.
(4) Field replacement kit for 1 pair of inputs P/N: DCD-3PH-1TBK.

RoHS

© SolarEdge Technologies, Inc. All rights reserved. SOLAREDGE, the SolarEdge logo, OPTIMIZED BY SOLAREDGE are trademarks or registered trademarks of SolarEdge Technologies, Inc. All other trademarks mentioned herein are trademarks of their respective owners. Date: 10/2015. V.01. Subject to change without notice.

SolarEdge Power Optimizer

Module Add-On for Commercial Installations for North America P600 / P700

POWER OPTIMIZER

PV power optimization at the module-level
The most cost effective solution for commercial and large field installations

- Up to 25% more energy
- Superior efficiency (99.5%)
- Balance of System cost reduction; 50% less cables, fuses and combiner boxes, over 2x longer string lengths possible
- Fast installation with a single bolt
- Next generation maintenance with module-level monitoring
- Module-level voltage shutdown for installer and firefighter safety
- Use with two PV modules connected in series

SolarEdge Power Optimizer Module Add-On

For Commercial Installations for North America P600 / P700

		P600 (for 2 x 60-cell PV modules)	P700 (for 2 x 72-cell PV modules)	
INPUT				
Rated Input DC Power[1]		600	700	W
Absolute Maximum Input Voltage (Voc at lowest temperature)		96	125	Vdc
MPPT Operating Range		12.5 - 80	12.5 - 105	Vdc
Maximum Short Circuit Current (Isc)		10		Adc
Maximum DC Input Current		12.5		Adc
Maximum Efficiency		99.5		%
Weighted Efficiency		98.6		%
Overvoltage Category		II		
OUTPUT DURING OPERATION (POWER OPTIMIZER CONNECTED TO OPERATING SOLAREDGE INVERTER)				
Maximum Output Current		15		Adc
Maximum Output Voltage		85		Vdc
OUTPUT DURING STANDBY (POWER OPTIMIZER DISCONNECTED FROM SOLAREDGE INVERTER OR SOLAREDGE INVERTER OFF)				
Safety Output Voltage per Power Optimizer		1		Vdc
STANDARD COMPLIANCE				
EMC		FCC Part15 Class B, IEC61000-6-2, IEC61000-6-3		
Safety		IEC62109-1 (class II safety), UL1741		
RoHS		Yes		
INSTALLATION SPECIFICATIONS				
Compatible SolarEdge Inverters		Three phase inverters		Vdc
Maximum Allowed System Voltage		1000		
Dimensions (W x L x H)	Pxxx-2 series	143 x 210 x 45 / 5.63 x 8.26 x 1.75		mm / in
	Pxxx-5 series	128 x 152 x 43 / 5 x 5.97 x 1.69	128 x 152 x 48 / 5 x 5.97 x 1.89	mm / in
Weight (including cables)	Pxxx-2 series	1100 / 2.4		gr / lb
	Pxxx-5 series	930 / 2.05		gr / lb
Input Connector		MC4 Compatible		
Output Wire Type / Connector		Double Insulated; MC4 Compatible		
Output Wire Length		1.8 / 5.9	2.1 / 6.9	m / ft
Operating Temperature Range[2]		-40 - +85 / -40 - +185		˚C / ˚F
Protection Rating	Pxxx-2 series	IP65 / NEMA4		
	Pxxx-5 series	IP68 / NEMA6P		
Relative Humidity		0 - 100		%

[1] Rated combined STC power of 2 modules connected in series. Module of up to +5% power tolerance allowed.
[2] For ambient temperature above +70˚C / +158˚F power de-rating is applied. Refer to Power Optimizers Temperature De-Rating Application Note for more details.

PV SYSTEM DESIGN USING A SOLAREDGE INVERTER[3][4]		THREE PHASE 208V	THREE PHASE 480V	
Compatible Power Optimizers		P600 & P700[5]	P600 & P700	
Minimum String Length	Power Optimizers	8	13	
	PV Modules	16	26	
Maximum String Length	Power Optimizers	30	30	
	PV Modules	60	60	
Maximum Power per String		6000	12750	W
Parallel Strings of Different Lengths or Orientations		Yes		

[3] P600 and P700 can be mixed in one string. It is not allowed to mix P600/P700 with P300/P400 in one string.
[4] In a case of odd number of PV Modules in one string it is allowed to install one P600/P700 power optimizer connected to one PV Module.
[5] P700 design with three phase 208V inverters is limited. Use the SolarEdge Site Designer for verification.

© SolarEdge Technologies, Inc. All rights reserved. SOLAREDGE, the SolarEdge logo, OPTIMIZED BY SOLAREDGE are trademarks or registered trademarks of SolarEdge Technologies, Inc. All other trademarks mentioned herein are trademarks of their respective owners. Date: 12/2014. V.01. Subject to change without notice.

GENMOUNTS LT

BALLASTED SOLAR RACKING SYSTEMS

UL 467 CERTIFIED

MADE IN THE USA

OUR FOCUS

Our objective to provide customers with the highest quality solar mounting system at the lowest installed cost.

COMMITMENT

We are proud to provide products and services to the renewable industry, while restoring this nation's technology and manufacturing jobs.

RECOMMENDED APPLICATIONS

- Roof-top Installations
- Ground Installations
- Sealed Landfills
- Roofs with minimal load ratings
- Prevailing wage projects

PRODUCT FEATURES

- 100% universal mounting design; system can fit any commercial grade module without modification.
- Non-penetrating, flexible, ballasted PV mounting system.
- Designed to withstand wind loads up to 150 mph.
- Simplified assembly that consists of 2 main components and 2 fasteners.
- Top down compression clamps & serrated hardware provide integrated bonding. Arrays grounded at one point. (no clips or copper wire)
- Total array weight can be low as 3.0 lb./sf at the array.
- 2" conduit hole located on each side of pan.
- All parts can be re-used if the system is moved.

SYSTEM SPECIFICATIONS

- Pan Material: 0.063" thick Aluminum 5052-H32
- Pan Width: 30" minimum (5° PV tilt).
- Row Spacing: 8.2" (North-South)

GENMOUNTS
SOLAR RACKING SYSTEMS

Genmounts 97 River Road, Flemington NJ 08822 • P. 908-788-7750 • F. 908-837-9021 • www.genmounts.com

GENMOUNTS LT

BALLASTED SOLAR RACKING SYSTEMS

UL 467 CERTIFIED

MADE IN THE USA

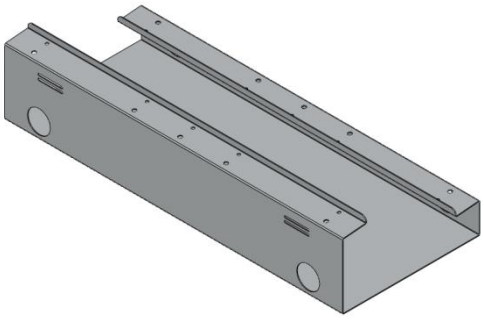

BALLAST PAN

BONDING MID-CLAMP

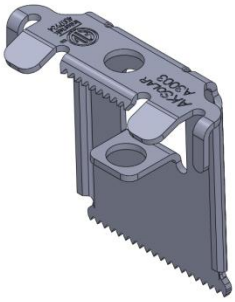

BONDING END-CLAMP

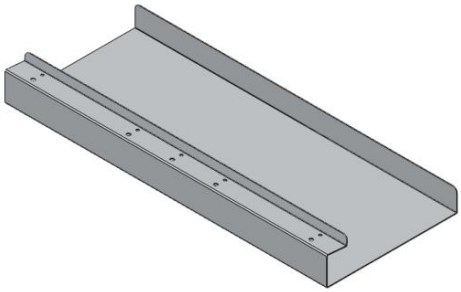

END PAN

Universal design consists of only 2 major components and top down compression bonding mid & end clamps.

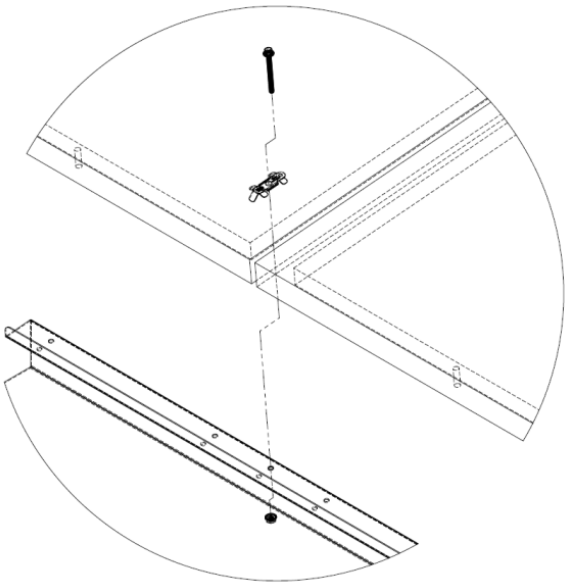

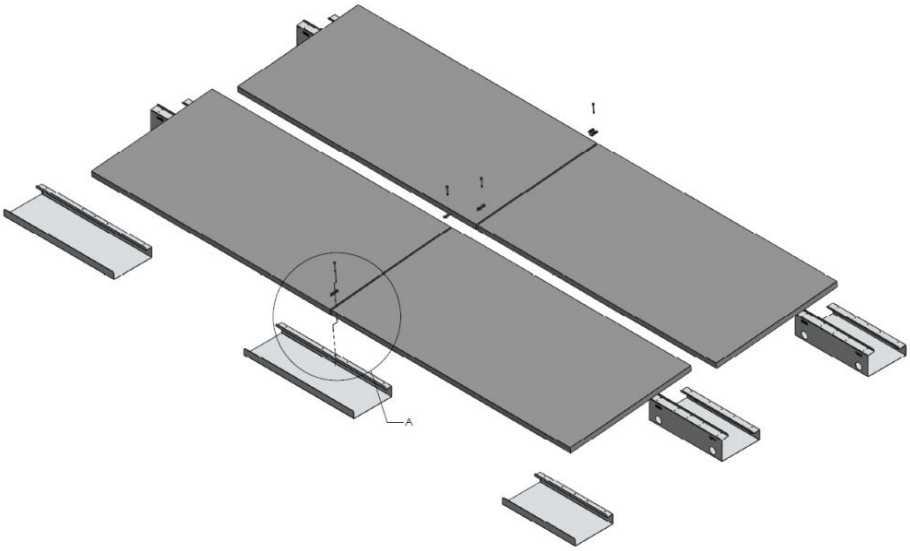

GENMOUNTS
SOLAR RACKING SYSTEMS

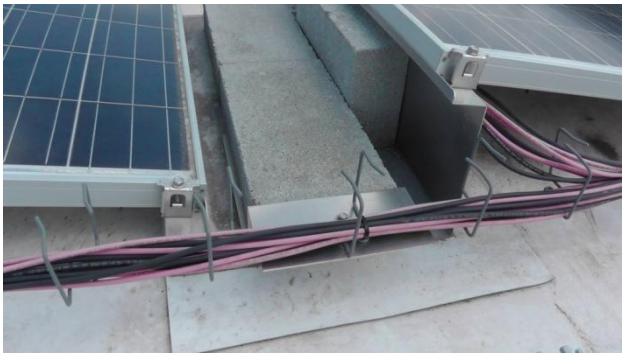

Genmounts 97 River Road, Flemington NJ 08822 • P. 908-788-7750 • F. 908-837-9021 • www.genmounts.com
Version 2.0

FS System™

Features and Benefits

- ETL Classified
- High level of pre-assembled parts
- Proven extremely short installation time
- High quality and sustainable materials
- Easily accessible for ground and system maintenance
- Included certified engineering by professional engineer licensed in the location of the project
- Included soil tests and pull out tests on systems larger than 250 kW
- Options for in field adjustment, if needed

The Schletter FS System has a proven worldwide product and installation history, with over 6 GW of ground mount systems installed throughout the world and many FS installations ranking among the largest globally.

Project specific system calculations and optimized material utilization address the ever-increasing need to reduce costs in planning PV systems, taking into account balance of system (BoS). Complete structural calculations are provided for the system design, while assuring compliance with current building codes and regulations.

The FS System offers a culmination of experience and the highest level of inhouse pre-fabrication to date, while always maintaining the focus of making the overall cost of a PV system more competitive. **The result is an attractive system installed quickly, efficiently, and with the durability to last.**

Schletter stands behind the quality, durability, and functionality of its products and services its customers with professionalism. Because of our commitment to customer satisfaction, all Schletter systems have a voluntary 10-year warranty.

For more information, please visit www.schletter.us or call (520) 289 - 8700.

Design Process

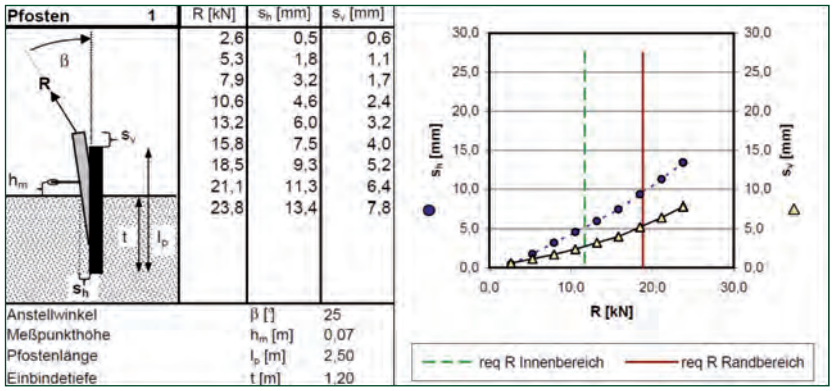

The first step in planning a ground mount system is a thorough soil investigation and pull out tests of the posts at the project site. Such testing generally requires numerous soil samples and subsequent soil classifications, which are the basis for determining the quantitative bearing capacity. Testing includes:

- Vertical pull-out tests
- Lateral load tests
- Independent laboratory analysis of soil classification, corrosion potential, gradation and soil plasticity

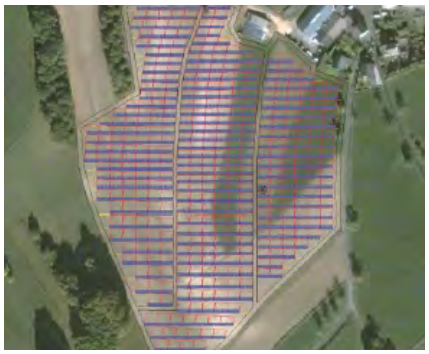

Layout planning for the FS System can be accomplished using the **Helios 3D™** layout software. Helios 3D features automatic, optimized drop shadow free placement of PV tables, making planning large systems virtually seamless. The program's sophisticated design tools and intuitive workflow allows users to complete days worth of project work in hours.

A two-part software system, Helios 3D consists of database management and an AutoCAD-based drafting interface. Helios 3D is a proven software system for utility scale solar planning in Europe and Schletter is the exclusive distributor of Helios 3D in North and South America.

➲ Helios 3D Product Sheet

The FS foundation consists of hot-dip galvanized steel posts (also known as profiles) with a proprietary u-shaped design. The u-shape grants optimum anchorage in the soil while maximizing the post strength.

Installation of posts into the soil is performed quickly by means of a terrain versatile hydraulic ram (GAYK). This pile-driving technique is especially suitable for the installation of large systems. The **GAYK™ Ram** features a track machine with center pounding for more efficient and accurate installations. Even difficult terrain conditions (gravel or stones) are possible; in case of bedrock, the GAYK can be equipped with a drilling unit. It is possible to ram posts on slopes up to 20 degrees.

➲ GAYK Ram Product Sheet

© Schletter Inc • 3761 E Farnum Place • Tucson, Arizona 85706 • Tel: (520) 289 - 8700 • Fax: (520) 289 - 8696
E-mail: mail@schletter.us • www.schletter.us

Product Enhancements

The FS System is the result of experience gained through years of project planning and implementation of ground mount systems. The system is enhanced with new support designs that include a high level of pre-fabrication.

Four simple steps are done in the field:

- Drive the post into the ground
- Place the support on the post attachment head and bolt the lower strut
- Insert the locking plate at the attachment head
- Install the cross beams—that´s it!

For any type of module, including the more fragile thin film modules, clamps are available. Schletter works with many module manufacturers to find the most appropriate clamping methods by performing structural FEM simulations with various modules and our clamping options.

The cross beams feature a profile geometry that is designed for optimal distribution of forces. Suitable bolt channels are integrated in all profiles for more efficient mounting. The cross beams are fixed to the support units by means of special mounting claws that are pre-assembled in the exact position required for the chosen module.

Time is Money

A reduction of BoS costs in the mechanical area is only possible by a minimization of the mounting time at the construction site. The materials of FS System are **pre-assembled in the factory** and are delivered to the construction site according to the customer's requested delivery schedule.

Technical Data

Material	• Fastening elements, bolts: Stainless steel 304 and 316 • Profiles (rails): Aluminum alloy 6105 T5 • High life-expectancy, high residual value, no disposal costs • Pile driven support posts: Steel, cold-rolled, hot-dip galvanized, ASTM A123 Grade 75
Logistics	• Quick and simple mounting • Maximum level of prefabrication prior to shipment
Construction	• Can be installed on uneven terrain • Simple adjustment options • Cost optimized configurations for framed and unframed modules
Accessories	• Cable channels, cable ducts • Components for potential equalization/grounding • Clamps for every type of module • Fastening systems for large laminate modules (OptiBond system)
Calculations	• 100% code compliant designs for any locality • Third-party structural PE, stamped drawings and calculations • Individual system structural calculations based on geotechnical report • Individual system design calculations based on regional load values • Design loads according to IBC 2006, 2009, or 2012 • Patented profile geometries with optimum material utilization • Verification of all construction components based on FEM-calculation • Earthquake simulation, optional
Available Third-Party Services	• Geotechnical soil investigation and analysis • Ramming of foundations • Optional: rack mounting • Optional: complete module mounting • EPC services • PPA formation 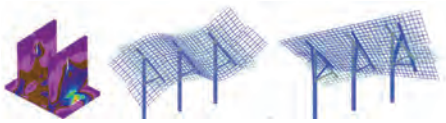
Terrain maintenance	• Simple terrain maintenance due to single support - Specification of module height above ground possible
Grounding, Potential equalization	• Grounding options available • Components for the internal potential equalization
Warranty and Certifications	• 10-year warranty, optional 20-years

© Schletter Inc. 022013, I400042USA, V2

© Schletter Inc • 3761 E Farnum Place • Tucson, Arizona 85706 • Tel: (520) 289 - 8700 • Fax: (520) 289 - 8696
E-mail: mail@schletter.us • www.schletter.us

SolarMount Technical Datasheet

Pub 110818-1td V1.0 August 2011

SolarMount Module Connection Hardware **1**
Bottom Up Module Clip 1
Mid Clamp 2
End Clamp 2
SolarMount Beam Connection Hardware **3**
L-Foot 3
SolarMount Beams **4**

SolarMount Module Connection Hardware

SolarMount Bottom Up Module Clip
Part No. 302000C

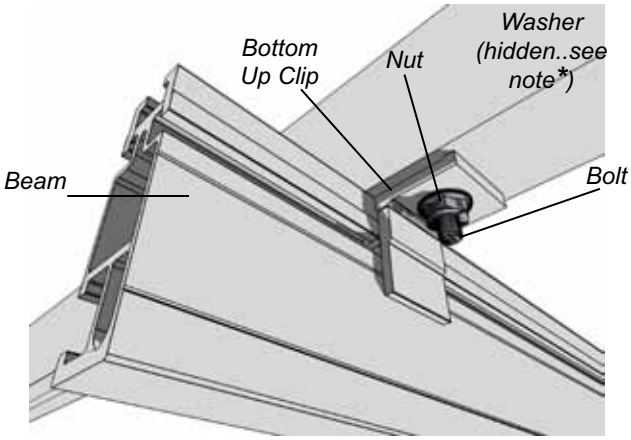

- **Bottom Up Clip material:** One of the following extruded aluminum alloys: 6005-T5, 6105-T5, 6061-T6
- **Ultimate tensile:** 38ksi, Yield: 35 ksi
- **Finish:** Clear Anodized
- **Bottom Up Clip weight:** ~0.031 lbs (14g)
- Allowable and design loads are valid when components are assembled with SolarMount series beams according to authorized UNIRAC documents
- Assemble with one ¼"-20 ASTM F593 bolt, one ¼"-20 ASTM F594 serrated flange nut, and one ¼" flat washer
- Use anti-seize and tighten to 10 ft-lbs of torque
- Resistance factors and safety factors are determined according to part 1 section 9 of the 2005 Aluminum Design Manual and third-party test results from an IAS accredited laboratory
- Module edge must be fully supported by the beam

* **NOTE ON WASHER:** Install washer on bolt head side of assembly. **DO NOT** install washer under serrated flange nut

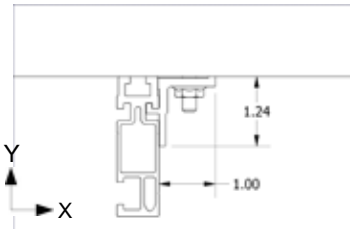

Applied Load Direction	Average Ultimate lbs (N)	Allowable Load lbs (N)	Safety Factor, FS	Design Load lbs (N)	Resistance Factor, Φ
Tension, Y+	1566 (6967)	686 (3052)	2.28	1038 (4615)	0.662
Transverse, X±	1128 (5019)	329 (1463)	3.43	497 (2213)	0.441
Sliding, Z±	66 (292)	27 (119)	2.44	41 (181)	0.619

Dimensions specified in inches unless noted

SolarMount Mid Clamp

Part No. 302101C, 302101D, 302103C, 302104D, 302105D, 302106D

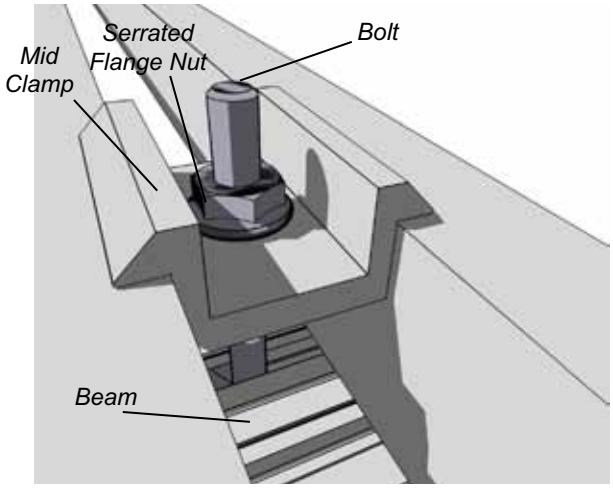

- **Mid clamp material:** One of the following extruded aluminum alloys: 6005-T5, 6105-T5, 6061-T6
- **Ultimate tensile:** 38ksi, Yield: 35 ksi
- **Finish:** Clear or Dark Anodized
- **Mid clamp weight:** 0.050 lbs (23g)
- Allowable and design loads are valid when components are assembled according to authorized UNIRAC documents
- Values represent the allowable and design load capacity of a single mid clamp assembly when used with a SolarMount series beam to retain a module in the direction indicated
- Assemble mid clamp with one Unirac ¼"-20 T-bolt and one ¼"-20 ASTM F594 serrated flange nut
- Use anti-seize and tighten to 10 ft-lbs of torque
- Resistance factors and safety factors are determined according to part 1 section 9 of the 2005 Aluminum Design Manual and third-party test results from an IAS accredited laboratory

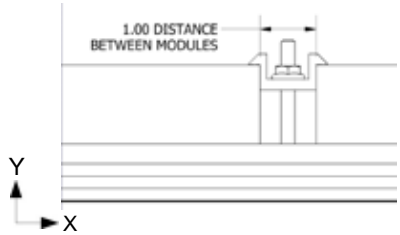

Dimensions specified in inches unless noted

Applied Load Direction	Average Ultimate lbs (N)	Allowable Load lbs (N)	Safety Factor, FS	Design Load lbs (N)	Resistance Factor, Φ
Tension, Y+	2020 (8987)	891 (3963)	2.27	1348 (5994)	0.667
Transverse, Z±	520 (2313)	229 (1017)	2.27	346 (1539)	0.665
Sliding, X±	1194 (5312)	490 (2179)	2.44	741 (3295)	0.620

SolarMount End Clamp

Part No. 302001C, 302002C, 302002D, 302003C, 302003D, 302004C, 302004D, 302005C, 302005D, 302006C, 302006D, 302007D, 302008C, 302008D, 302009C, 302009D, 302010C, 302011C, 302012C

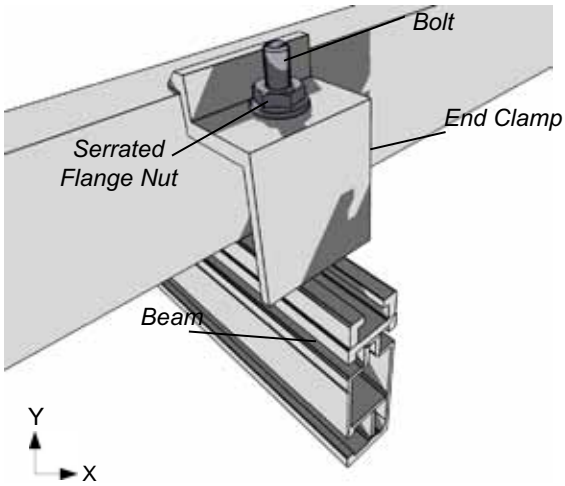

- **End clamp material:** One of the following extruded aluminum alloys: 6005-T5, 6105-T5, 6061-T6
- **Ultimate tensile:** 38ksi, Yield: 35 ksi
- **Finish:** Clear or Dark Anodized
- **End clamp weight:** varies based on height: ~0.058 lbs (26g)
- Allowable and design loads are valid when components are assembled according to authorized UNIRAC documents
- Values represent the allowable and design load capacity of a single end clamp assembly when used with a SolarMount series beam to retain a module in the direction indicated
- Assemble with one Unirac ¼"-20 T-bolt and one ¼"-20 ASTM F594 serrated flange nut
- Use anti-seize and tighten to 10 ft-lbs of torque
- Resistance factors and safety factors are determined according to part 1 section 9 of the 2005 Aluminum Design Manual and third-party test results from an IAS accredited laboratory
- Modules must be installed at least 1.5 in from either end of a beam

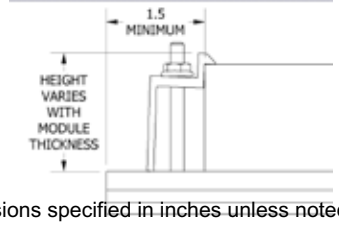

Dimensions specified in inches unless noted

Applied Load Direction	Average Ultimate lbs (N)	Allowable Load lbs (N)	Safety Factor, FS	Design Loads lbs (N)	Resistance Factor, Φ
Tension, Y+	1321 (5876)	529 (2352)	2.50	800 (3557)	0.605
Transverse, Z±	63 (279)	14 (61)	4.58	21 (92)	0.330
Sliding, X±	142 (630)	52 (231)	2.72	79 (349)	0.555

SolarMount Beam Connection Hardware

SolarMount L-Foot
Part No. 304000C, 304000D

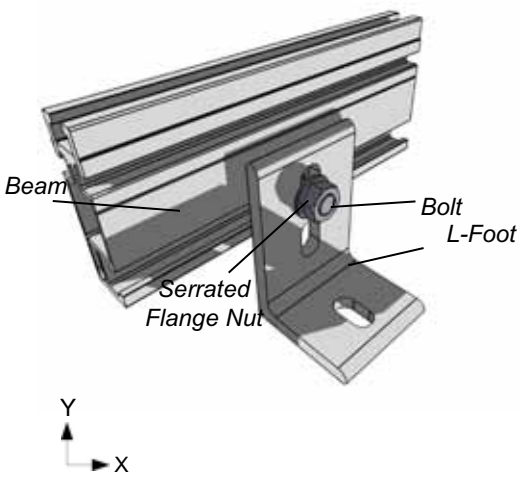

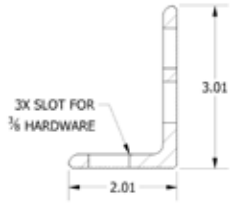

Dimensions specified in inches unless noted

- **L-Foot material:** One of the following extruded aluminum alloys: 6005-T5, 6105-T5, 6061-T6
- **Ultimate tensile:** 38ksi, Yield: 35 ksi
- **Finish:** Clear or Dark Anodized
- **L-Foot weight:** varies based on height: ~0.215 lbs (98g)
- Allowable and design loads are valid when components are assembled with SolarMount series beams according to authorized UNIRAC documents
- **For the beam to L-Foot connection:**
  - Assemble with one ASTM F593 ⅜"-16 hex head screw and one ASTM F594 ⅜"serrated flange nut
  - Use anti-seize and tighten to 30 ft-lbs of torque
- Resistance factors and safety factors are determined according to part 1 section 9 of the 2005 Aluminum Design Manual and third-party test results from an IAS accredited laboratory

NOTE: Loads are given for the L-Foot to beam connection only; be sure to check load limits for standoff, lag screw, or other attachment method

Applied Load Direction	Average Ultimate lbs (N)	Allowable Load lbs (N)	Safety Factor, FS	Design Load lbs (N)	Resistance Factor, Φ
Sliding, Z±	1766 (7856)	755 (3356)	2.34	1141 (5077)	0.646
Tension, Y+	1859 (8269)	707 (3144)	2.63	1069 (4755)	0.575
Compression, Y-	3258 (14492)	1325 (5893)	2.46	2004 (8913)	0.615
Traverse, X±	486 (2162)	213 (949)	2.28	323 (1436)	0.664

SolarMount Beams

Part No. 310132C, 310132C-B, 310168C, 310168C-B, 310168D 310208C, 310208C-B, 310240C, 310240C-B, 310240D, 410144M, 410168M, 410204M, 410240M

Properties	Units	SolarMount	SolarMount HD
Beam Height	in	2.5	3.0
Approximate Weight (per linear ft)	plf	0.811	1.271
Total Cross Sectional Area	in^2	0.676	1.059
Section Modulus (X-Axis)	in^3	0.353	0.898
Section Modulus (Y-Axis)	in^3	0.113	0.221
Moment of Inertia (X-Axis)	in^4	0.464	1.450
Moment of Inertia (Y-Axis)	in^4	0.044	0.267
Radius of Gyration (X-Axis)	in	0.289	1.170
Radius of Gyration (Y-Axis)	in	0.254	0.502

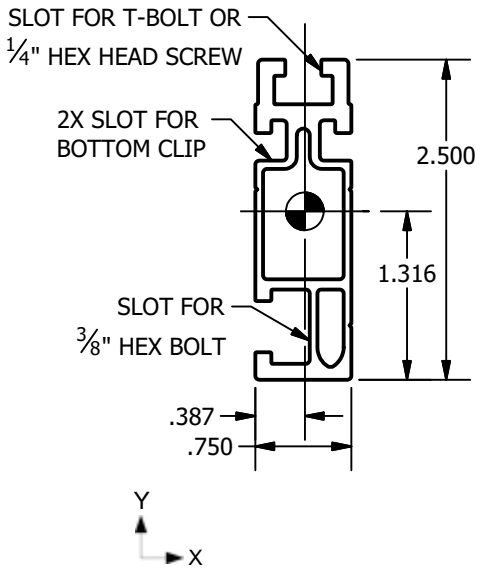

SolarMount Beam

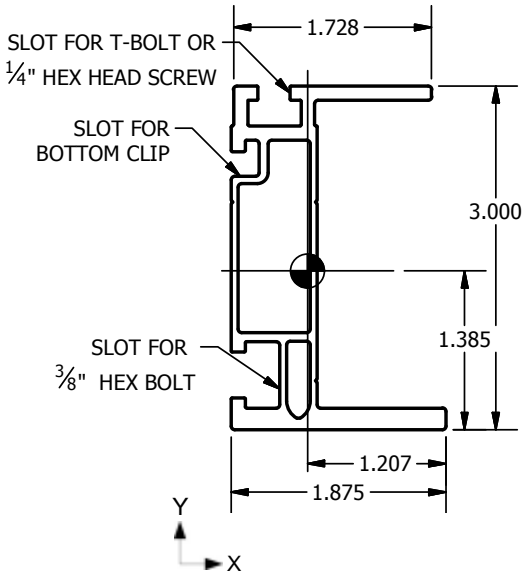

SolarMount HD Beam

Dimensions specified in inches unless noted

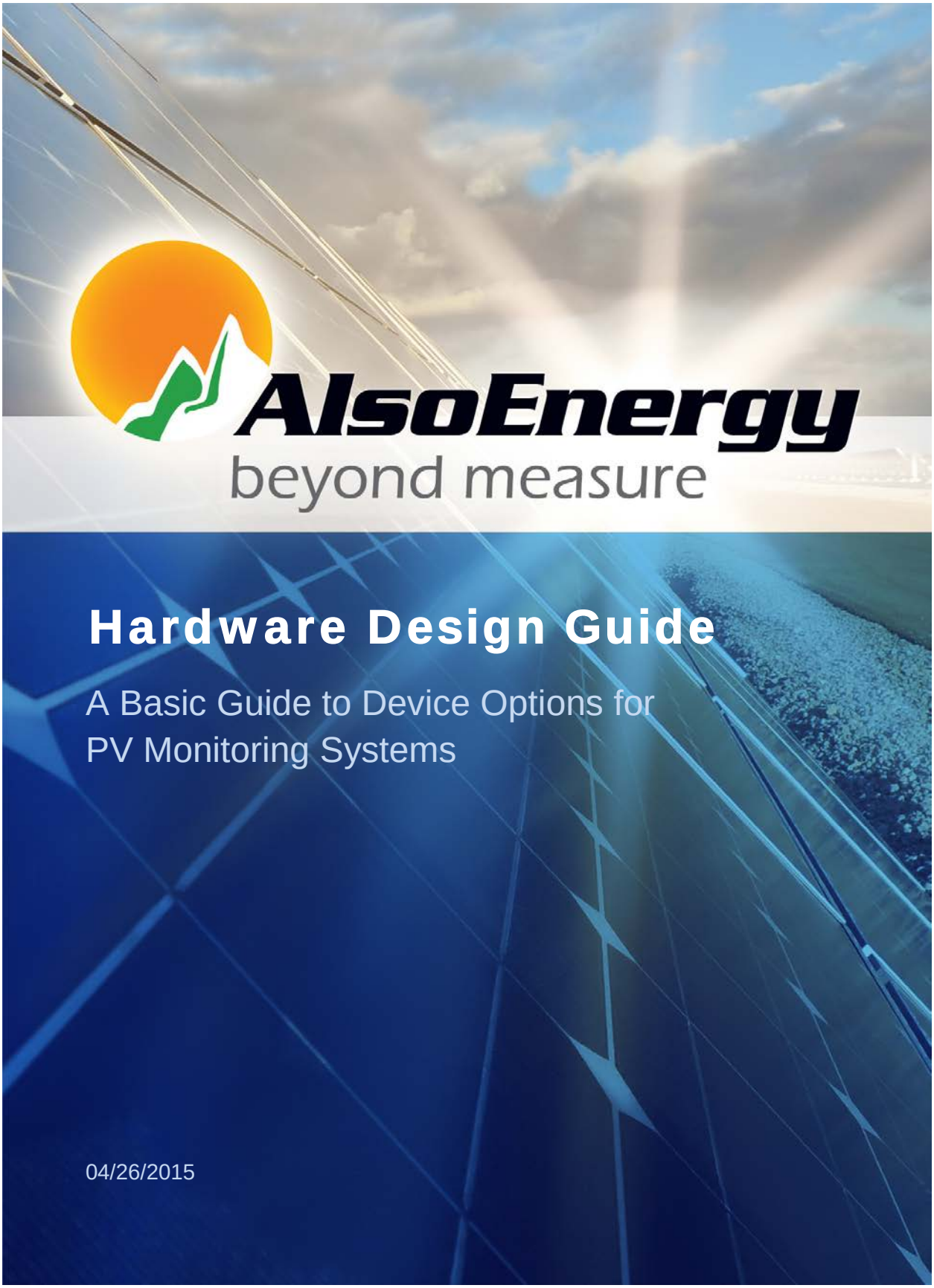

Hardware Design Guide

A Basic Guide to Device Options for PV Monitoring Systems

04/26/2015

Hardware Design Guide

AlsoEnergy provides a complete energy monitoring system and support for PV installations. Hardware is available as a turn-key system to minimize installation time. Our combination of features, functionality and competitive pricing makes AlsoEnergy the highest value monitoring solution.

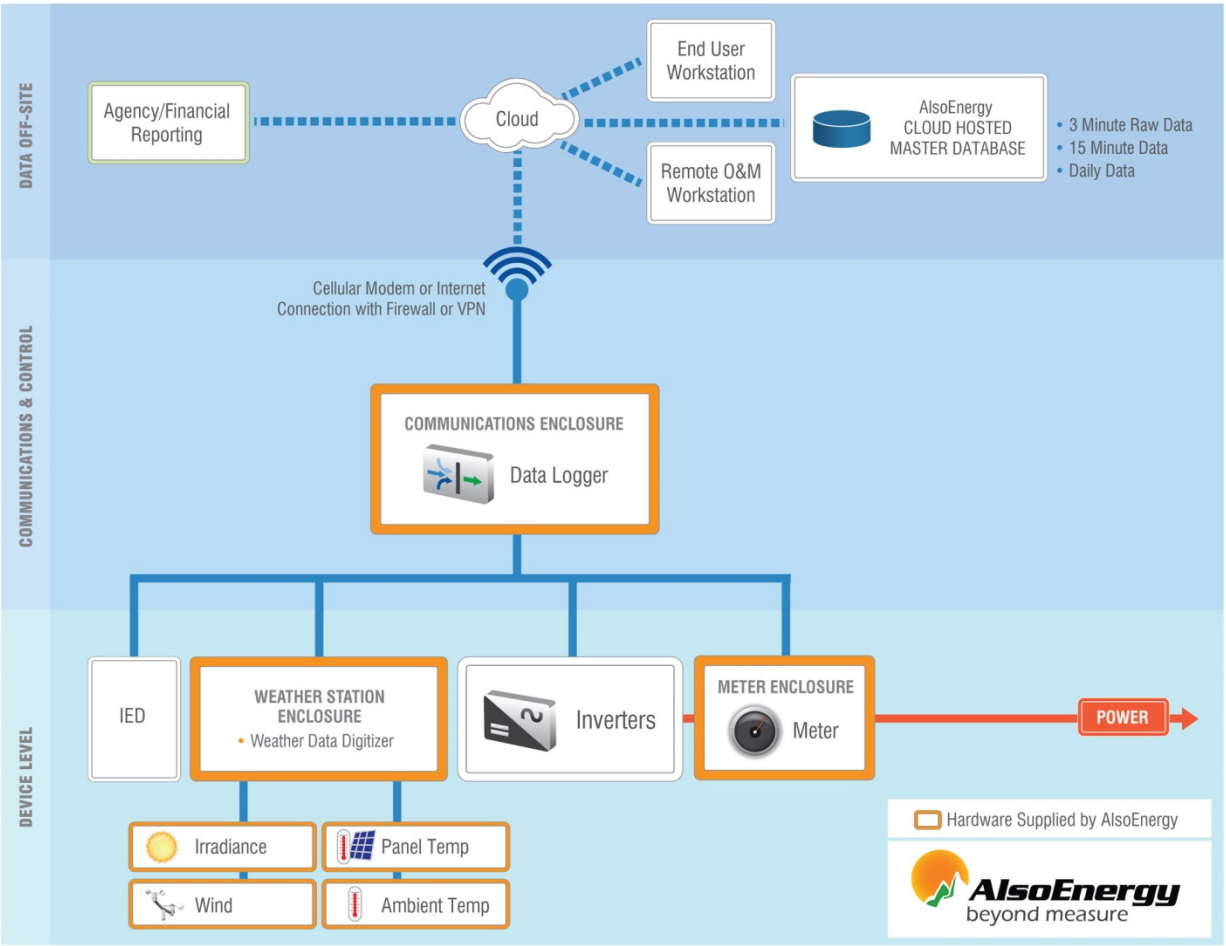

Basic Monitoring System Diagram

Our equipment comes in prewired NEMA 4 enclosures designed for easy installation. However, we do offer on-site installation support services if desired. The enclosure contains a data logger and optionally a weather station and revenue grade meter. The following pages provide an overview of our hardware solutions, but are not a complete list of all the devices we provide or support. Please let us know if you have any special hardware requests and we will do our best to accommodate.

NEMA 4 Outdoor Enclosure

- Internal power supply
- Surge suppressors
- Room for two additional devices
- Dimensions:
  15.75” tall, 15.75” wide, 8.25” deep
- Includes 3’ Ethernet cable

NEMA 4 enclosure shown with data logger plus revenue grade meter

Data Logger

Our proprietary software is loaded on commercial hardware to produce our custom data logger. We gather raw data with our data loggers.

The Data Logger connects to inverters, meters and weather stations typically over MODBUS (other protocols are available).

In the event of network outages, data is stored on a removable SD card and uploaded when network functionality is restored. The SD card has the capability to store a years’ worth of data. Inverter faults are directly detected and alerts can be optionally sent. Data is securely transmitted to the cloud hosted database.

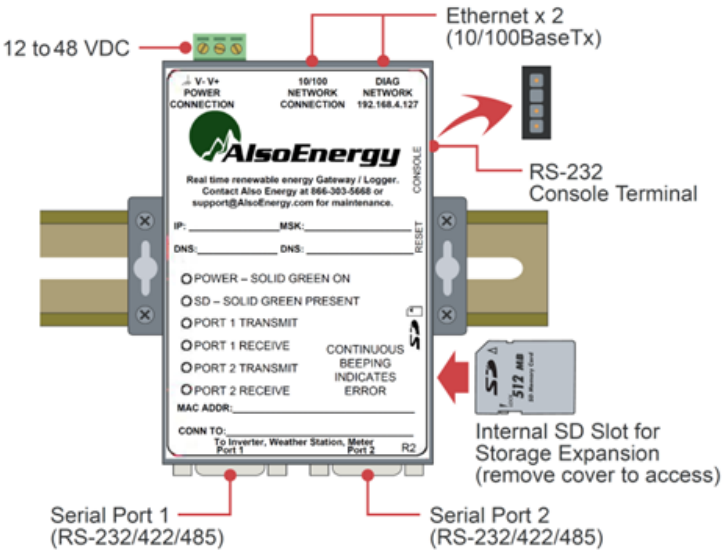

Data Logger Features Include:

- Automatic real-time upload of data in customizable time intervals
- Automatic remote firmware updates
- Supports multiple inverters
- 2 modbus serial ports
- RoHS 100-240VAC
- UL, CSA, FCC, CE, TUV, CTick, VCCI Agency Approvals

Metering Solutions

Metering solutions are provided with current transformers to ensure system accuracy. Discrepancies between Production Meter and Inverter reported production is detected and alerts can be optionally sent. Other meters are available upon request.

FEATURES:

- ANSI C12.20 Class 0.2
- 24VAC/VDC excitation power (PLC/DDC compatible)
- Digital communication via RS-485 (MODBUS RTU)
- Two pulse outputs
- Rolling Window Demand calculations
- Two 0-10V analog outputs may be configured to represent any two instantaneous parameters
- Small, DIN mount enclosure
- Optically Isolated output signals

PRODUCT DESCRIPTION:

The WattsOn® universal power transducer utilizes cutting edge technology to implement a multi-functional power and energy transducer into a small, cost-effective package. WattsOn incorporates three meters into one to provide a unique solution for monitoring up to three single-phase loads, or one three-phase load. By using two of the inputs, it may be used with split-phase loads also.

WattsOn™ provides comprehensive per phase (as well as cumulative) information, including Volts, Amps, Real Power, Reactive Power, Apparent Power, Watt-hours, VAR-hours, VA-hours, Power Factor and Frequency.

Power (Real and Reactive) is a signed measurement and the meter accumulates both import *and* export energies as well as capacitive *and* reactive energy *per phase*.

The unit accepts up to 600V (line-to-line) directly without the need for potential transformers. It accepts standard mV output CTs (333mV or 1000mV full scale output), as well as Elkor's line of "safe" mA split and solid core CTs. Optionally, the unit may be equipped with an internal interfacing module to accept any standard 5A CT.

The WattsOn® transducer features a high accuracy chipset and provides register updates up to two times per second. The true-RMS inputs may be used even with distorted waveforms such as those generated by variable frequency drives and SCR loads.

Information is available via the RS-485 (Modbus RTU) output port. In addition, two solid-state relay pulse outputs are available for Wh energy pulses as well as Qh pulses or direction of power flow indication. Optionally, the second pulse output may be substituted for two 0-10VDC outputs that may represent any instantaneous parameter that the meter measures. The analog outputs and their scaling may be field selected and adjusted via the RS-485 output port.

Metering Solutions

SPECIFICATIONS:

INPUTS

Voltage 600 V or 600/347 V
480 V or 480/277 V
208 V or 208/120 V

Single Phase, Split Phase, Three Phase
50 or 60 Hz

Current
- 333mV or 1000mV full scale output CTs.
- Elkor "Safe" mA output solid/split core CTs.
- 5A from standard CTs.

DEVICE SPECIFICATIONS

Power Supply 15-24VAC or 20-30VDC, 100mA max.

Accuracy Better than 0.2% of reading (at 25°C, pf>=0.5) for most parameters.

Environment Protected Installation; -40 to +60°C, 10 to 90% RH non-condensing

Isolation All line inputs are isolated from the outputs
Hi-Pot testing: 2500VAC for one minute

Enclosure 3.7" x 3.8" x 1.7" (94mm x 97 mm x 43 mm) W x L x H (note: height does not include DIN base).

Weight mA/mV : 150g (5.5 oz)
5A : 200g (7 oz)

Safety UL Recognized (Canada and US)

OUTPUTS

Wh/Qh Solid state relay (24V, 150mA MAX), change of 100ms pulse on every pre-defined Wh value

Qh output may be configured to represent direction of real power via Modbus.

Analog Outputs (optional) Qh output may be substituted for two 0-10V analog outputs. Output parameters and span, and full scale may be field adjusted using Modbus communications.

RS-485 Modbus RTU; up to 64 units may be connected to one 'chain'.

MEASURED PARAMETERS (available via Modbus)

Voltage [V] (A, B, C, Avg, AB, AC, BC, Avg)
Current [A] (A, B, C, Avg)
Active Power [W] (A, B, C, Total) – Bi-directional
Apparent Power [VA] (A, B, C, Total)
Reactive Power [VAR] (A, B, C, Total) — Bi-directional
Power Factor (A, B, C, System) — Bi-directional
Frequency [Hz]
Import/Export Energy [Wh] (A, B, C, Total)
Inductive/Capacitive Energy [VARh] (A, B, C, Total)
Apparent Energy [VAh] (A, B, C, Total)
Total Demand Power [W]

All parameters are available in integer and floating point format.

TYPICAL WIRING:

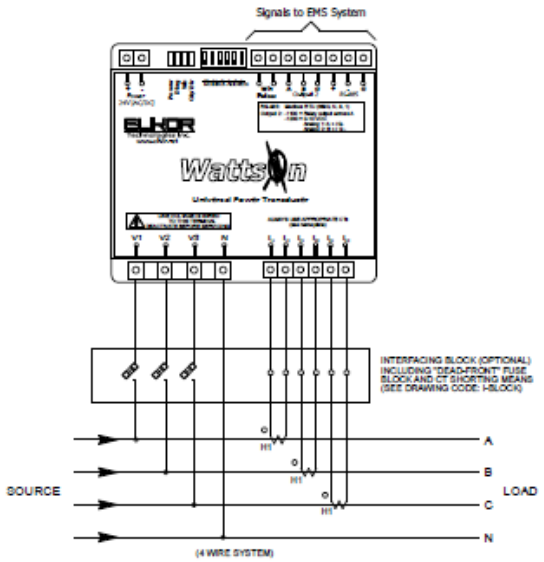

ORDERING INFORMATION:

```
                    WattsOn-[1]-[2]-[3]-[4]
Where:
    [1] Specifies Output Type:
            1100 = RS-485 + 2 x Pulse;
            1200 = RS-485 + 1 x Pulse + 2 x Analog

    [2] Specifies CT Input Type:

          5A        Inputs for 5A CTs
          MCTA      Inputs for MCTA (Solid Core) CTs (up to 300A)
          MCTB      Inputs for MCTB (Solid Core) CTs (up to 450A)
          MSCT1     Inputs for MSCT1 (Split Core) CTs (up to 200A)
          MSCT2     Inputs for MSCT2 (Split Core) CTs (up to 600A)
          MSCT3     Inputs for MSCT3 (Split Core) CTs (up to 1500A)
          MSCT6     Inputs for MSCT6 (Split Core) CTs (up to 3000A)
          333mV     Inputs for 333mV output CTs
          1000mV    Inputs for 1000mV output CTs

          *** Contact Elkor for other input options

    [3] Specifies CT full scale current (N/A for 5A, 333mV and
        1000mV options)

    [4] Specifies Nominal Frequency (for greater accuracy).
        (60Hz is assumed if not specified)

    *** Note: By default, analog outputs are configured as 1) Total
Real Power and 2) Average Current.  The anticipated nominal voltage
should be stated to properly configure the output scaling.  Analog
output values and scaling may be changed later via Modbus.

Example:  WattsOn-1200-MSCT3-800A-50Hz

Specifies transducer with 0-10V analog outputs, and current inputs
calibrated for MSCT3 CTs, 800A maximum full scale, with a nominal
frequency of 50Hz

Example:  WattsOn-1100-5A

Specifies transducer with two pulse outputs, calibrated for 5A inputs,
and 60Hz nominal frequency.
```

Weather Stations

Also Energy has developed high quality weather stations; custom-designed to accommodate the weather monitoring needs of any solar site. Our solutions range from a basic model consisting of a pyranometer, ambient temperature sensor and module temperature sensor, to a multi-input weather station.

	Basic	Standard
Ambient Temperature	Yes	Yes
Module Temperature	Yes	Yes
Wind Speed	No	Yes
Wind Direction	No	Yes
Pyranometer (Irradiance)	Yes	Yes

Our weather station solutions are highly cost competitive, and include five years of data storage and maintenance.

Weather Station Instruments

Anemometer : Wind Speed & Direction

- Rugged components stand up to hurricane-force winds
- Includes sealed stainless-steel bearings for long life.
- Digital filtering, with time constant is applied to wind direction measurements

Pyranometer: Solar Irradiance

- A thermopile pyranometer measures all of the energy between 280 and 2800 nm.

Temperature Sensors

- BAPI Outdoor & High Temperature sensors
- BAPI panel temperature sensors
- Quick-Response Sensor
- Well-Vented
- Watertight Enclosure

Upgrade Options

Kipp & Zonen Pyranometer: Solar Irradiance

- Includes Signal Conditioner
- 10m cable

Weather Station Remote Enclosure

- N4 Continuous Hinge 12X10X5 IN

Kipp Zonen CMP-3 Pyranometer

Weather Station Specifications

Ambient Temperature	-40° to 122°F, RTD Sensor 4.5°F Max Error at 77°F 6.3°F Max Error over -13° to 221°F
Module Temperature	-40° to 140°F, RTD Sensor 4.5°F Max Error at 77°F 6.3°F Max Error over -13° to 221°F
Wind Speed	3 to 175 mph, Greater of ±3 mph or ±5%
Wind Direction	0° to 360° , ±7°
Pyranometer	0 - 1,750 W/m^2 (1.75 x full sun) ± 1% Cosine Response @ 45° zenith ± 5% Cosine Response @ 75° zenith ± 5% Absolute Accuracy ± 3% Uniformity, ± 1%Repeatability +1% per year long term stability
Protocol	Modbus RS-485 2 wire + ground
Operating temperature:	-20°C to 60°C
Relative humidity:	Up to 95% non-condensing
Enclosure Type:	NEMA 4

Lobby Displays and Kiosks

Lobby displays and kiosks enable you and your customers to publicly showcase your commitment to renewable energy, displaying real time data in an attractive, compelling and informative presentation.

Key Benefits:

- Display historical and real time PV System performance charts
- Customized display of interesting and educational information promoting clean energy
- Highlight and quantify the positive impact of your Solar PV System
- Custom home-page with corporate photo and marketing information
- Perfect for retail and corporate lobbies, educational facilities of all levels, and other high-traffic areas
- Embedded URL option available

AlsoEnergy provides two hardware display options:

- Wall mount 27" LCD Screen
- Free standing kiosk with 19" LCD touch screen

Appendix I: Technical Proposal

SunLight General Capital
Solar Energy Development and Financing

SunLight General Capital, LLC

Technical Submission

I. Management & Performance Capabilities

SunLight General Capital's Director of Project Management and Engineering, Peter Dubro, PE, will lead Project Management and possesses vast experience in the development, engineering, and installation of comparable system installations. Mr. Dubro will lead the development process of the sites to drive a streamlined approach that will include, but is not limited to, the following:

- Site inspections
- Preliminary site plans and single line drawings
- Coordination / Communication with the Towns of Bristol and Barrington on preliminary feasibility
- Construction Drawing creation for final candidate sites
- Coordination / Communication with the Towns on final designs
- Obtain all Permits and Approvals
- Material Procurement
- Pre-Construction Meetings and Progress Meetings
- Quality Control / Quality Assurance Inspections and Documentation
- Manage the Submittal / RFI process in conjunction with the Towns
- Serve as Main Point of Contact with the Towns for the construction of the projects
- Conduct testing and commissioning of the completed system
- Provide safety training to the Towns and fire departments as required

In addition to Mr. Dubro, PE serving as the Project Manager for the projects, John DiBari of NextPath Finance will serve as Executive Project Manager for the projects.

SunLight General Capital will generate a complete construction package for the system installations that will be executed upon and delivered by the Local Work Force installation contractors. In this fashion, contractors will have a clear understanding of the systems to be constructed for their pricing purposes. SunLight General Capital is proposing to, upon the completion of the site qualification and final construction drawing package, manage a competitive bidding process for the installation of the systems, participated in by selected, The Towns of Bristol and Barrington-approved qualified local contractors. In addition to introducing significant cost savings to the Towns in the delivery of the projects, SunLight General Capital intends to partner with local qualified contractors in order to support the local workforce and communities.

Mr. Dubro, PE will coordinate with the contractor Superintendents at each project location to clearly communicate on and manage the day-to-day filed operations for the construction of each facility. Material purchases will be managed by SunLight General Capital and delivery schedules coordinated with the site Superintendents, upon review and approval by the Towns and each Local Unit Representative, for the delivery of materials directly to the project locations. Mr. Dubro, PE

will also manage the RFI and submittal process with the contractor(s), Local Unit Representatives and the Towns.

The operational project will be cared for by Azimuth 180, SunLight General Capital's wholly-owned Solar Operations and Maintenance Company under the direction of Stephen Schneider, Director of Operations. Mr. Schneider is a NABCEP Certified Solar PV Installer. Mr. Schneider and his team of Operations and Maintenance engineers will provide the operations and maintenance for the system as is described later within this proposal.

The key risk areas of this project are related to the following:

- Proper and accurate qualification and initial design for each candidate site
- Proper and accurate verification of all environmental and construction permitting required
- Proper and accurate verification of utility acceptability of each project

If not performed properly and accurately from the onset, initial site designs can create time delays later in the process due to unforeseen restrictions or conditions. A thorough and in-depth study covering all of the qualifying factors for each of the two proposed sites will be performed by SunLight General Capital as the first steps of the process in order to quantify and understand site-specific challenges and restrictions. This information will feed the decision making process for the sites that will comprise the project.

Once the preliminary design work and site plans have been finalized, SunLight General Capital will proceed with seeking the required environmental permitting for the sites where applicable. This process will be managed by Mr. Dubro, PE.

Concurrent to seeking the initial approvals required for the projects, SunLight General Capital will submit to the relevant utility an application for interconnection for the proposed facilities. The utility will proceed with their study of the existing electrical infrastructure in the area of the projects and will formally issue the results of their findings.

II. Project Approach

For the Towns of Bristol and Barrington, SunLight General Capital is proposing the turnkey delivery, including to fund, design, seek all approvals for, install, test, commission, operate, maintain, repair as needed and provide asset management for rooftop and ground mount solar photovoltaic power generation facilities at the optimal project locations provided by the RFP.
The expected preliminary design solar PV capacity for all locations is as follows:

- Total Proposed System Capacity: 6,264 kW DC
- First-Year Expected Production: 8,263,666 kWh

As the final discovery and design process will dictate the final capacity and location of all solar arrays, SunLight General Capital will endeavor to provide a final system size that maximizes the available area at each facility, maximizes the expected production for all installed capacity and

maximizes the energy savings afforded to the Towns. In return, the Towns of Bristol and Barrington will commit, as appropriate, to purchase the clean energy generated by the solar facilities according to the rate schedule provided within this proposal or to lease roof space to Quahog for the installation of systems that will supply the RE Growth Progran.

SunLight General is proposing the installation of Solar Edge inverters, which utilize DC optimizers embedded within the array. Each optimizer is powered by two panels. The system inverters will be mounted at ground level within a locked security fence. All electrical enclosures located in public areas will be locked and secured.

The solar photovoltaic power generation facilities will include several integral security measures necessary to protect the property. This includes a minimum 8-foot fence with vinyl coated 1.25" 9 AWG mesh around all equipment pads (where applicable). Additionally, all electrical equipment will remain locked and secured within the fenced areas in order to provide an additional layer of safety. Signage mounted to the equipment pad fences, if approved by the Towns, will provide notice of the presence of the high voltage power generation facility. All fence gates will remain locked at all times and can utilize a lock daisy chain in order to afford both SunLight General Capital and the Towns access to the equipment areas.

Expected Production

In order to predict the energy output for the solar photovoltaic power generation facilities, SunLight General Capital utilizes NREL's PVWatts Version 5.

	Site	Address	Site kW DC	Site 1st-Year kWh	kWh/kW
1	Closed Landfill	Minturn Farm Road	3014.1	4,124,392	1,368
2	Town Hall	10 Court Street	24.7	31,195	1,263
3	Dreadnaught Fire Station	Church and High Street	13.3	17,522	1,317
4	Bristol Maritime Center	125 Thames Street	456	575,940	1,263
5	Bristol Police Station	395 Metacom Avenue	25.0	33,327	1,333
6	Fire Station/Headquarters	4 Annawamscutt Ave	25.0	32,976	1,319
7	Bristol Animal Shelter	10 Minturn Farm Road	92.7	126,454	1,364
8	Dept. of Public Works	111 Mt. Hope Road	72.9	88,983	1,221
9	Wastewater Treatment Plant	1 Plant Avenue	130	175,332	1,349
10	Quinta Gamelin Community Center	101 Asylum Road	12	15,997	1,333
11	Mt. Hope High School	199 Chestnut Street	466.9	577,364	1,237
12	Former Reynolds School	261 High Street (235 High Street)	25.0	33,397	1,336
1	Barrington Public Works	100 Federal Road	43.3	50,981	1,177
2	Barrington High School	220 Lincoln Avenue	690.8	893,870	1,294
3	Barrington Middle School	261 Middle Highway	404	511,239	1,265
4	Hampden Meadows School	New Meadows Road	242.8	305,516	1,258
5	Nayatt Elementary	400 Nayatt Road	187.5	237,314	1,266
6	Primrose Hill	60 Middle Highway	189.2	239,526	1,266
7	Sowams Elementary	364 Sowams Road	166.7	210,827	1,265

Summary of Expected First-Year Energy Production:

Total DC Design Capacity (kW): . . . . . 6,264 kW

Total Expected 1st-Year Production (kWh): . . . . . .8,263,666 kWh
Total Expected 1st-Year Production / Design Capacity (kWh/kW): . . . . . 1,319 kWh

The variables to be considered in the above calculations as related to the specific project locations are primarily related to the following:

- Snow Coverage Performance Impact: PVWatts does not account for snow coverage impacts. These impacts have been more prevalent in recent years and can have a large impact to system performance, particularly in the months of January and February. Although the ten degree solar systems tend to provide accelerate snow melt rates when compared to other lower racking technologies, snow coverage does present a clear impact to performance.

Tree removal will be kept to only what is critical, but may be necessary in order to assure unimpeded solar access to the arrays. Shading can have a significant impact on system performance, specifically when central inverters are utilized. Although SolarEdge inverters, as proposed by SunLight General Capital, are significantly more resilient to the effects of partial shading on the array, SunLight's goal is to install systems that can provide maximum benefit to our customers. Following the final design process and the identification of any trees to be removed, SunLight General Capital will present to the Towns of Bristol and Barrington for review and approval the Detailed Site Plans including all trees and vegetation considered to have negative impacts to the performance of the designed system. If agreed to, SunLight General Capital will obtain any required approvals for such work, as required. Alternately, the system design can be modified should tree removal be problematic.

The following is a table listing the preliminary quantity of trees where removal is needed to provide unobstructed solar access to the project locations:

	Property	Address	Tree Removal
1	Closed Landfill	Minturn Farm Road	No
2	Town Hall	10 Court Street	No
3	Dreadnaught Fire Station	Church and High Street	No
4	Bristol Maritime Center	125 Thames Street	No
5	Bristol Police Station	395 Metacom Avenue	No
6	Fire Station/Headquarters	4 Annawamscutt Ave	No
7	Bristol Animal Shelter	10 Minturn Farm Road	No
8	Dept. of Public Works	111 Mt. Hope Road	No
9	Wastewater Treatment Plant	1 Plant Avenue	No - Yes if alternate ground mount is included ~ 9 trees
10	Quinta Gamelin Community Center	101 Asylum Road	No
11	Mt. Hope High School	199 Chestnut Street	No
12	Former Reynolds School	261 High Street (235 High Street)	No
1	Barrington Public Works	100 Federal Road	No
2	Barrington High School	220 Lincoln Avenue	No
3	Barrington Middle School	261 Middle Highway	Yes - approx 11 large trees
4	Hampden Meadows School	New Meadows Road	No
5	Nayatt Elementary	400 Nayatt Road	Yes - 1 or 2
6	Primrose Hill	60 Middle Highway	Yes - 1 or 2
7	Sowams Elementary	364 Sowams Road	No

The only expected and acceptable degradation to the system's performance is related to the annual module degradation estimated to be 0.5% per year. This degradation rate is closely tracked on all of SunLight General Capital's operational systems and the solar modules inclusive of a linear warranty are selected in order to allow for the replacement of underperforming modules by the manufacturer in a timely manner.

There are several other causes for system degradation that are completely preventable through the proper Operations and Maintenance of the facility. These causes, which are regularly tested for and repaired within each operational project include:

- Damaged / partially damaged module connectors
- Damaged / partially damaged solar modules
- Partially failed fuses

The single greatest cause for system underperformance is related to unexpected inverter shut-downs. Unfortunately, in many cases these unexpected shutdowns go unnoticed for periods of

time. In order to eliminate this possibility, SunLight General Capital receives and reviews daily an inverter report detailing the performance of each system inverter in operation at all project locations. Inverters showing an unexpected shutdown are immediately visited, inspected and restarted. In the circumstance where an inverter has a fault issue, manufacturers are immediately scheduled for repairs. Additionally, SunLight General Capital's wholly owned Operations & Maintenance Company, Azimuth 180, employs skilled and experienced Operations and Maintenance Engineers well versed in inverter maintenance and repair. This complete in-house approach to inverter monitoring and maintenance translates to maximized inverter uptime and energy generation output.

A possible additional cause of system performance degradation can result from module soiling, thereby decreasing the irradiance levels imposed on the modules' solar cells. This condition has a much greater impact on lower tilt systems. The 10-degree-minimum systems proposed for these projects enhance the ability of regular and periodic rainfall to clean the modules. The areas of each panel with the greatest exposure to soiling in this type of array configuration is the lower edge of each module as rainwater flushes over the module fame and grit becomes trapped on the glass. This soiling typically does not extend onto the solar module cells themselves, thereby not impacting performance. The bottom edge soiling is checked regularly and will be addressed in the circumstance where system performance is adversely affected. Shingled roof solar arrays and ground mount systems with increased tilt angles are even more effectively cleaned with periodic rainfall.

SunLight General Capital, in accordance with the responsibilities set forth in the RFP, will coordinate and execute the complete design construction process for the projects. As the initial phase, SunLight General Capital will coordinate and conduct all site inspections which will lead to the completion of site specific Detailed Site Plans specifying the location of all equipment, fencing, construction facilities and access ways and trees/brush to be removed. These Detailed Site Plans will be formally submitted to the Towns of Bristol and Barrington for review and comment. Once all revisions are complete and the Towns of Bristol approve of the designs, SunLight General Capital will commence the approval process, which includes coordination with:

- Local Electric Utility for permission to build / interconnect
- The State for the approvals and/or funding awards needed for the installation of the projects
- Relevant State, County and Local agencies in order to ascertain the required environmental permitting for each project

Upon receiving all approvals listed above, the Construction Drawings and related submittals for each project will be submitted to the Towns of Bristol and Barrington for issuance of permits for the delivery of the project.

It is difficult, if not impossible to provide an assurance that the utility will approve a project proposed by SunLight General Capital as part of this solar initiative. However, based on the moderate proposed solar PV facility capacity ratings, utility interconnection is not foreseen to be problematic. The 3 MW proposed solar PV facility at the land fill site would be expected to provide the greatest challenge in terms of interconnection. The aggregate effect of local solar PV

systems on single utility distribution circuits can also be expected to be a primary focus for the utility as well. (WHAT ABOUT 5 MW SITE?)

The constructed systems will serve to satisfy the minimum technical requirements specified in the RFQ. Generally speaking, the technical specifications provided within the RFQ are in line with the standard specifications included in SunLight General Capital's operational projects to date. The following is a complete list of the equipment proposed for use in these projects:

Standard PV System Equipment Offerings	Description	Units
Module Brand	Canadian SolarCS6X-325P	N/A
Module Wattage	325	W
Module Dimensions (H x W x D)	77.6 x 38.7 x 1.6	INCHES
Module Efficiency	16.78	%
Module Production Warranty	25	YEARS
Module Equipment Warranty	10	YEARS
Mounting System Brand and Type	1) GenMounts LT Ballasted Solar Racking 2) Schletter FS Ground Mount Racking 3) UniRac SolarMount	N/A
Inverter Brand	SolarEdge	N/A
Inverter Wattage	33,300	W
Inverter Voltage	480	V
Inverter Warranty	12	YEARS
Inverter DC Optimzer	SolarEdge P700	NA
Data Acquisition System	SolarEdge / Also Energy	N/A

All material orders will be communicated and managed by SunLight General Capital's Project Management Team and coordinated with the installation contactors at each project location. Upon receipt of Notice to Proceed, completion of the site-specific Project Kick-Off meeting and approvals by the Towns of Bristol and Barrington for all staging and site logistic plans included within the Construction Drawing and Submittal Package, materials will be delivered directly to and stored on the project sites. Construction fence will be installed as a first step in the process in order to provide a secure staging area for the materials. Construction cameras may also be installed at each project location in order to remotely monitor the site during non-working hours. Materials will be stored in the approved staging areas on each site and will include containers in order to store materials and tools. Component deliveries will be scheduled in order to fall in line with the construction cycle.

The Towns will not be responsible for receiving, storing or transporting any of the materials needed for the delivery of the projects. However, proposed delivery schedules will be submitted to the Towns for approval in advance of any material deliveries to each project site.

Any impacted areas away from the solar array locations will be restored to pre-existing conditions. This potentially includes all construction entrances, underground and overhead wire locations, areas of tree removal, equipment pads and areas immediately surrounding the projects. The arrays will be designed and installed on the existing roofing surfaces. At the onset of and throughout the project, SunLight General Capital will coordinate with the roofing manufacturer for each existing system the required inspections and approvals required to keep the existing roofing warranties in full force.

SunLight General Capital's design approach for these systems includes utilizing the existing conditions and layouts of the existing roofs for the installation of the solar photovoltaic power generation facilities. As such, it is not expected that the existing configuration of equipment, skylights, vents, etc. will be impacted by the solar project.

SunLight General Capital, in conjunction with our local labor installation contractor partners will provide to the Towns, in advance of the performance of any work, the Safety Plan that will be implemented for the projects.

Upon the completion of each site specific Detailed Site Plan and preliminary electrical design, utility interconnection applications will be generated to describe each project to the utility in an effort to secure the needed approvals to proceed with construction and ultimate interconnection of the facilities. The interconnection application process is quite formal and will be executed in good order. The Towns will be asked to review, approve and sign off on each application, as applicable.

Direct interface with utility throughout the project will be spearheaded by SunLight General Capital's Director of Engineering and Project Management, Peter Dubro, P.E. Mr. Dubro is very experienced with distributed generation / medium voltage system interfaces and interconnection requirements and will provide a seamless process in the effort to receive all needed approvals from the utility.

III. Operations and Maintenance

Operations & Maintenance Services are provided by Azimuth 180, LLC. The Azimuth 180 Team consists of experienced solar professionals includes engineers and electrical technicians. Azimuth 180, LLC is a wholly owned subsidiary of SunLight General Capital, LLC, the management company for the portfolio of solar PV facilities, and is tasked with the sole responsibility of monitoring, inspecting, repairing and maintaining the company's portfolio.

Scope of Services Provided:

On-site Services:

1) Preventative Maintenance:

a. Semi-annual Preventative Maintenance ("PM") inspections are performed on the system. The PM inspections entail the completion of a detailed site survey worksheet covering all aspects of the solar photovoltaic system, monitoring platform and communications systems.

b. The PM worksheet captures all repairs and service required by the system that cannot be completed during the PM inspection. Additional service visits are scheduled for the completion of all service items.

2) **Reactive Visits**:

a. All monitoring system fault alarms are received and processed remotely. Following the completion of the remote analysis, technicians are mobilized to the site in order to address issues.

b. All communications failures to the on-site monitoring system are responded to by a technician visit in order resume communications and enable remote monitoring of the facility.

c. Coordinate, support and host manufacturer technicians servicing major components in the PV system. The vast majority of these visits deal with the system inverters.

d. Based on declination of performance, module cleaning may be conducted in order to clear the modules of grit and debris which adversely impacts the performance of the system.

3) **Emergency Response**: Respond and mobilize to all emergencies on site. An emergency response phone number and email address are provided to all customers in order to assure the fastest response times.

4) **Severe Weather Response**: Site inspections are conducted following severe weather events. These site inspections are typically related to wind storms and excessive snowfall events.

Remote Services:

5) **4-Layer Remote Monitoring Program**:

a. **Daily:** Daily check of the status of all system inverters to verify system operation. Reactive visits scheduled as needed.

b. **Weekly:** Comparative Performance Cross-Check of all sites. Daily production values for all sites are compared on a regional basis weekly. Underperforming systems in each weekly period are scheduled for inspection.

c. **Monthly:** Comparative Performance Cross-Check of all sites with baseline benchmarking. Monthly production values for all sites are compared on a regional

basis. Each system is benchmarked by the expected production of the system for the time period using PVWatts production expectations.

d. **Quarterly:** Comparative Performance Cross-Check of all sites with baseline benchmarking and weather correction to expected performance. Monthly production data for all sites is analyzed each quarter. Expected production values for each system are adjusted by the recorded weather conditions in each project area.

Warranty:

6) SunLight General Capital will manage all warranty claims for all system components utilized in the solar PV facilities. Our Operations and Maintenance maintains strong relationships with the proposed equipment providers for this project and will manage all required site visits, replacements and repairs conducted by the manufacturer. The installation contractor will also provide a 5-year comprehensive system warranty for all workmanship and material defects.

   System inverters will be covered by a minimum 10-year warranty. Solar PV modules provide a 25-year power performance warranty.

System Life: The expected useful life of the solar modules is significant and provides for 80% of original nameplate rating in year 25. The system inverters could be perceived to be the weakest link in regards to the lifetime performance of the system. Consequently, SunLight's proposed design utilizes SolarEdge DC optimized string inverters to mitigate against the risk of inverter failure. Unlike larger central inverters, a loss of a single Solar Edge inverter will have a limited impact to overall system performance. Facilities installed with a limited number of central inverters are much more susceptible to performance issues related to the fault of a single inverter.

Decommissioning

Included in the delivery of the projects is the decommissioning and removal of the complete facility with restoration of the site to pre-construction original conditions. This may include, but is not limited to, all array components, wiring, racking, racking ballast, solar modules, inverters, buried conduit, manholes, pull boxes, perimeter fencing, overhead lines and poles, transformers, equipment pads and switches.

At a minimum of two years in advance of the end of the contract term for the projects, SunLight will present to the Towns the Decommissioning Plan for each facility. This plan will be submitted for review and comment and will afford SunLight the opportunity to update the plans in accordance with the Towns' feedback. Once the plan is finalized and agreed to, assuming that this takes a full year, the plan will be duly executed upon contract expiration and following SunLight securing the required permits for the performance of the work. Upon completion of the work, site inspections will be conducted jointly with SunLight and the Towns to verify that the restoration effort is complete.

Monitoring and Data Acquisition System

An intrinsic benefit to the use of Solar Edge inverters with DC optimizers is the granular level of remote monitoring which is provided by the platform. Each optimizer is tracked, resulting in the ability to view the performance of each panel within the array. Failed panels (typically resulting from a failed bypass diode within the panel) will be displayed in real time, enabling a fast replacement and repair time, along with enhanced system performance. Upon the completion of the installation of the system, the array is mapped so that Solar Edge can provide performance data via a virtual display of the array.

Once the system is mapped and the virtual array is available through Solar Edge, comparative analysis reports will be configured for each facility in order to monitor the relative performance between systems as well. Although the Solar Edge platform is extremely thorough in illustrating issues at the panel level, performance issues up-stream from the DC optimizers require additional layers of relative performance analysis in order to identify some of the common component issues detailed in the sections above.

The data acquisition system will also interface with all revenue grade meters and inverters in order to provide the full performance picture for each facility.

Additionally, weather stations will be installed at each project location in order to track the following perimeters in 15-minute intervals:

- Plane of Array Irradiance
- Horizontal Plane Irradiance
- Ambient Temperature
- Back of Module Temperature

General Photovoltaic

At major equipment locations and at each equipment pad, where applicable, emergency contact information will be posted in order to provide direct contact with the Operations and Maintenance Team in the event of an emergency. The signage will be a standard 8 inch by 12 inch plaque and is intended for emergency uses only

SunLight General Capital will not install any buildings, structures or appurtenances on the solar sites and all installations will meet or exceed applicable governmental statutes, codes, ordinances and accepted engineering and installation practices.

IV. Project Schedule – Major Milestones

All projects less than 1MW:

Notice to Proceed	2/15/2017
Site Inspections and Take-Offs	2/20/2017

Design Complete	3/15/2017
Interconnection Application Submitted	3/20/2017
Permitting Applications Submitted (Construction)	4/1/2017
Site Mobilization	4/25/2017
Substantial Completion/Installations	8/30/2017
Interconnection Completion	8/30/2017
Acceptance Testing	9/15/2017
Delivery of Operations & Maintenance Manuals	9/20/2017
Delivery of As-Built Drawings	9/20/2017
Facility Completion	9/20/2017
System Operational	9/20/2017

Large-Scale Ground Mount Projects

Notice to Proceed	2/15/2017
Site Inspections and Take-Offs	2/20/2017
Design Complete	4/15/2017
Interconnection Application Submitted	4/20/2017
Permitting Applications Submitted (Construction)	6/1/2017
Site Mobilization	7/25/2017
Substantial Completion/Installations	11/30/2017
Interconnection Completion	11/30/2017
Acceptance Testing	12/15/2017
Delivery of Operations & Maintenance Manuals	12/20/2017
Delivery of As-Built Drawings	12/20/2017
Facility Completion	12/20/2017
System Operational	12/20/2017

Minturn Farm Road Landfill: 3,014.1 kW DC 4,124,392kWh

10 Court Street: 24.7kW DC 31,195kWh

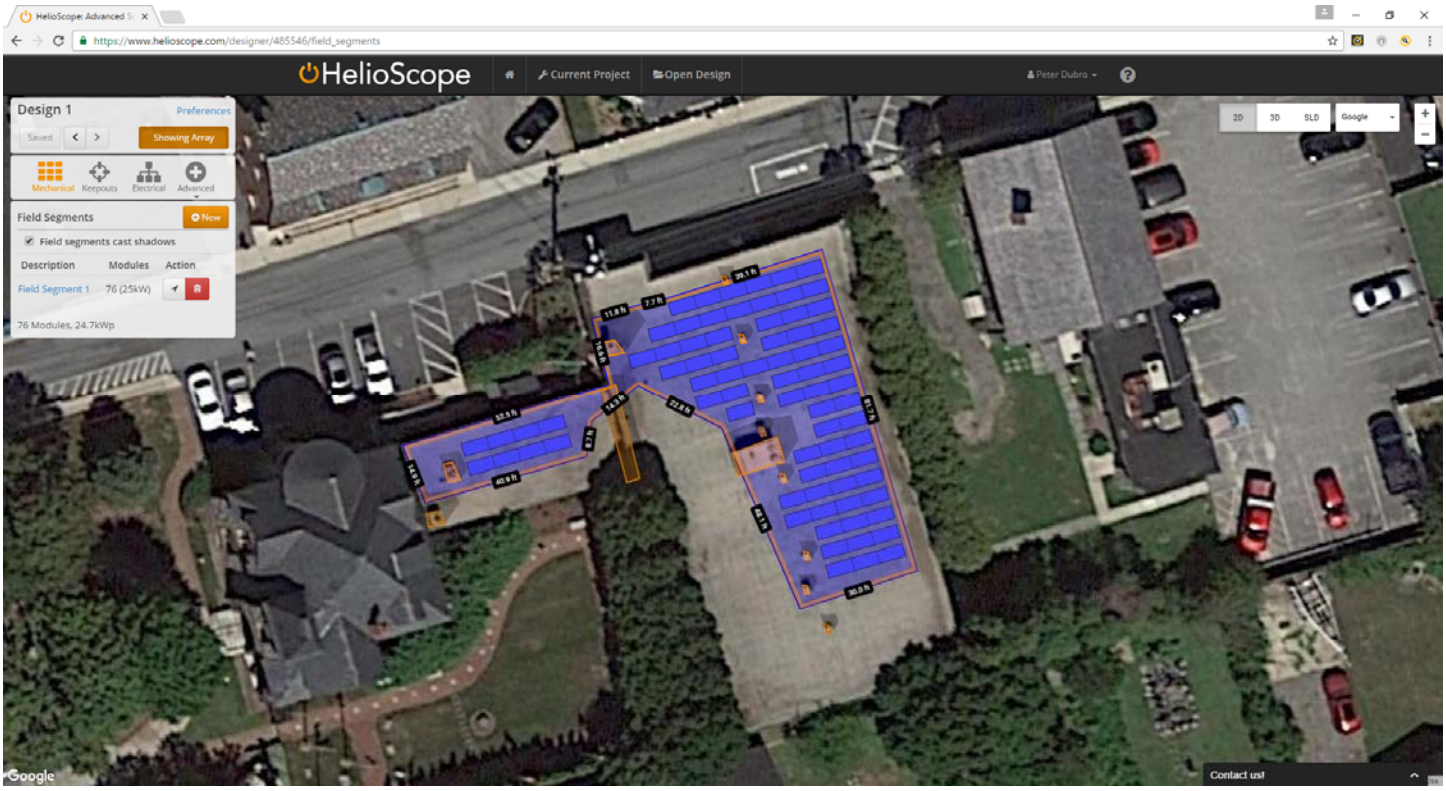

Church Street: 13.3kW DC 17,522kWh

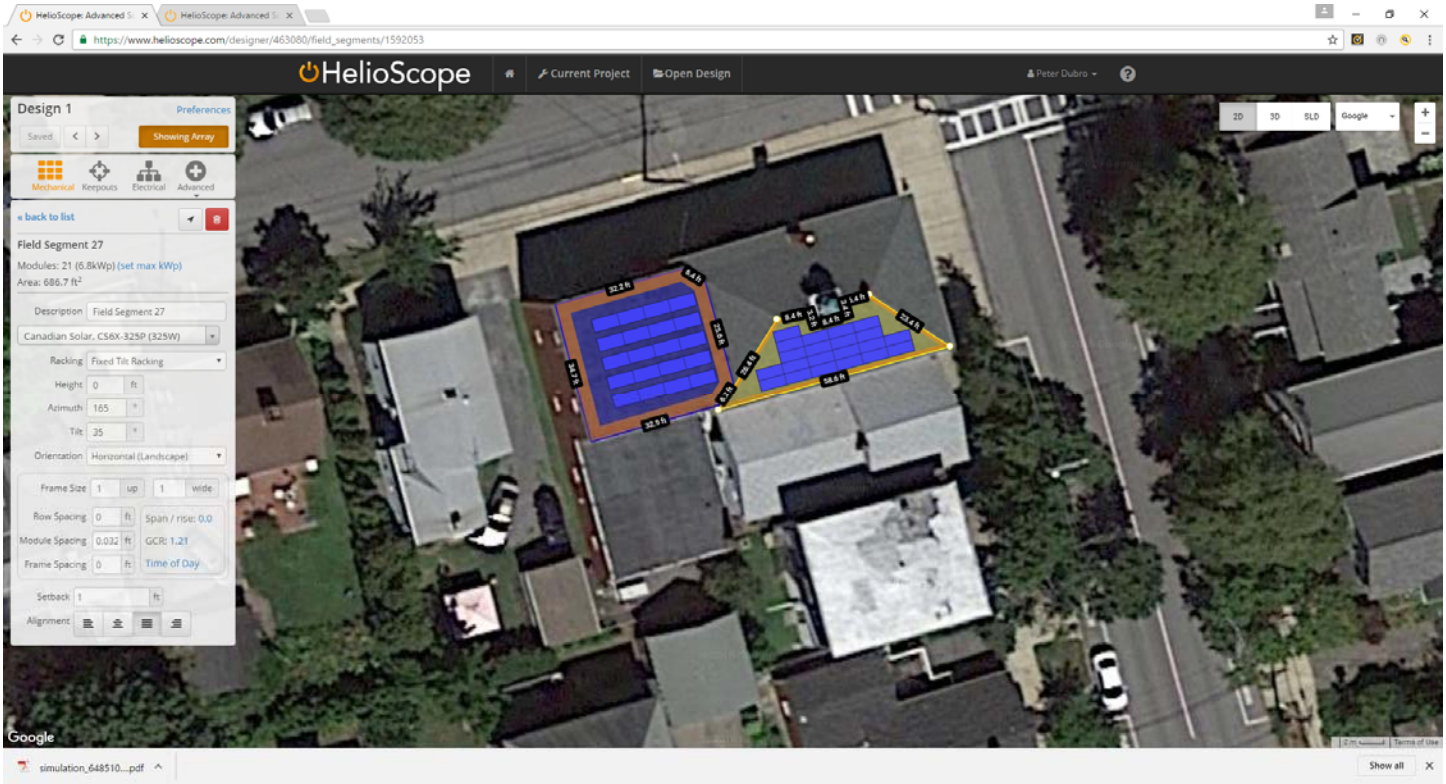

125 Thames Street 456.0kW DC 575,940kWh

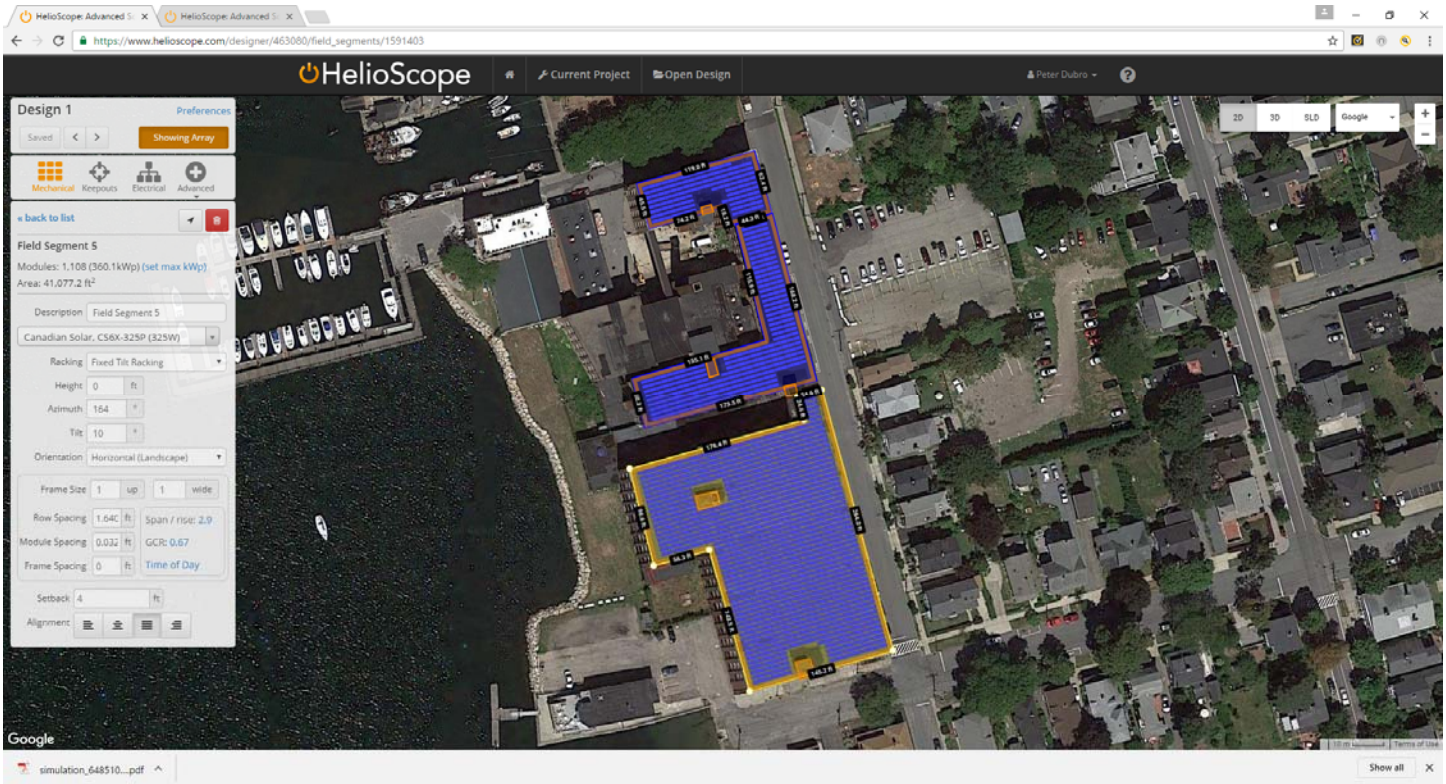

395 Metacom Avenue: 25.0kW DC 33,327kWh

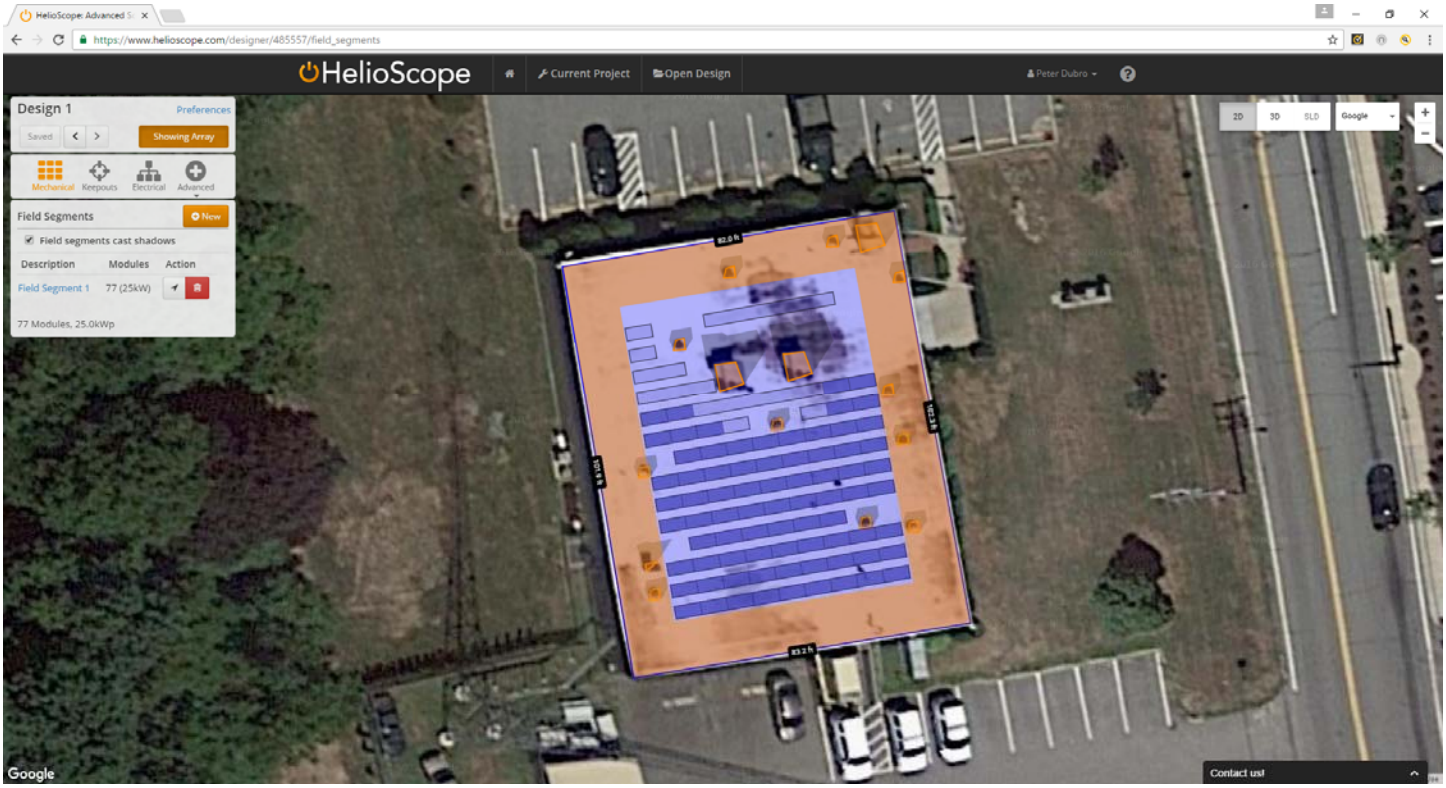

4 Annawamscutt Drive: 25.0kW DC 32,976kWh

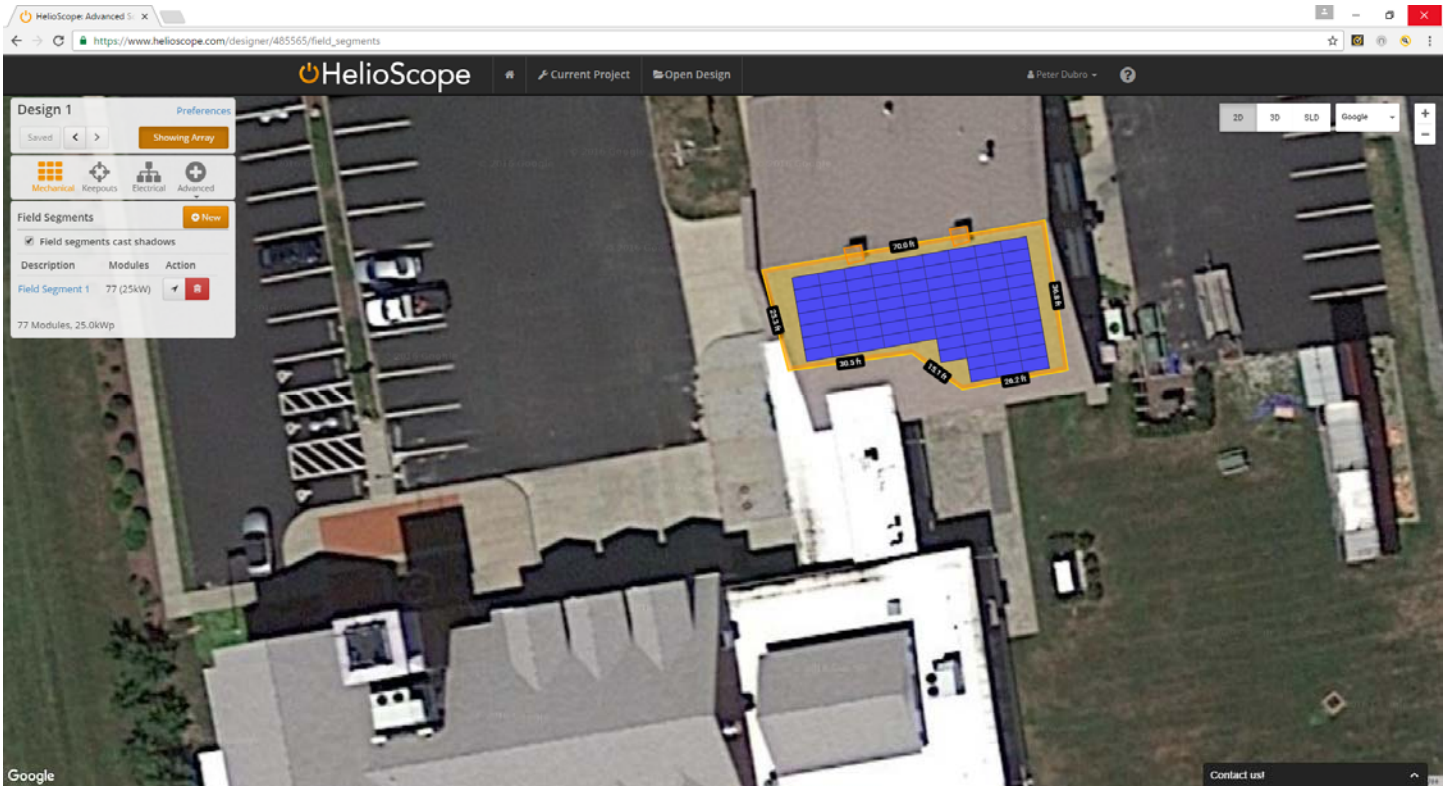

10 Minturn Farm Road: 92.7kW DC 126,454kWh

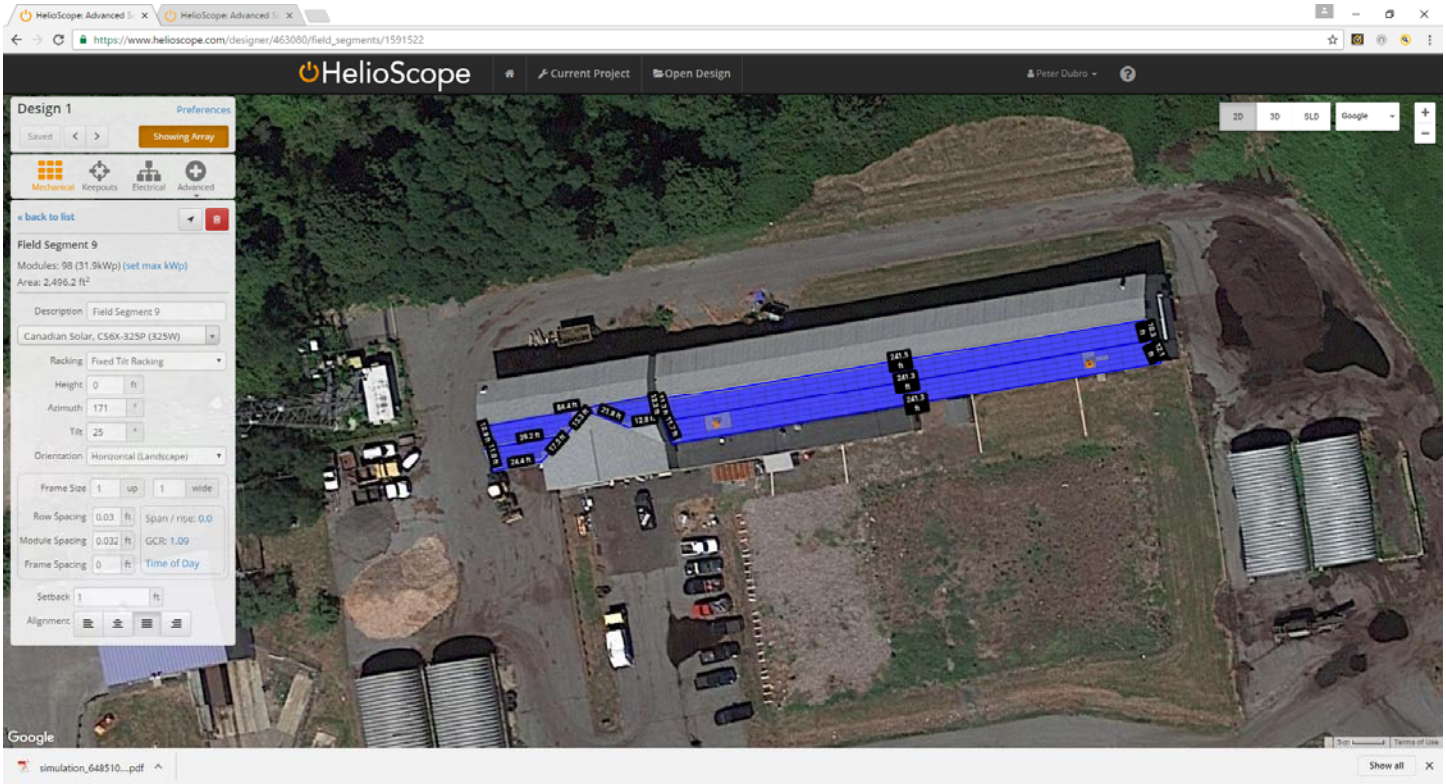

111 Mt. Hope Road: 72.9kW DC 88,983kWh

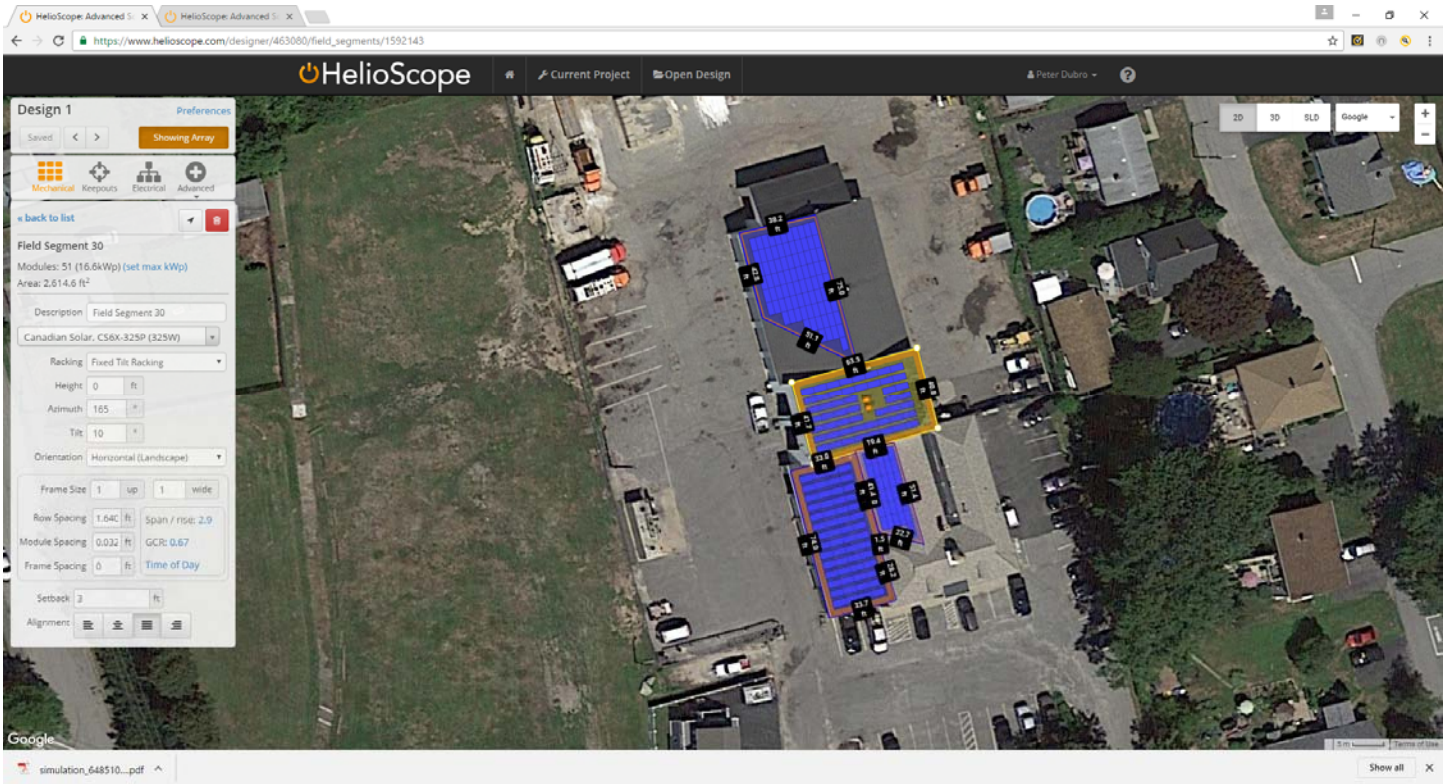

1 Plant Avenue: 130.0kW DC 175,332kWh

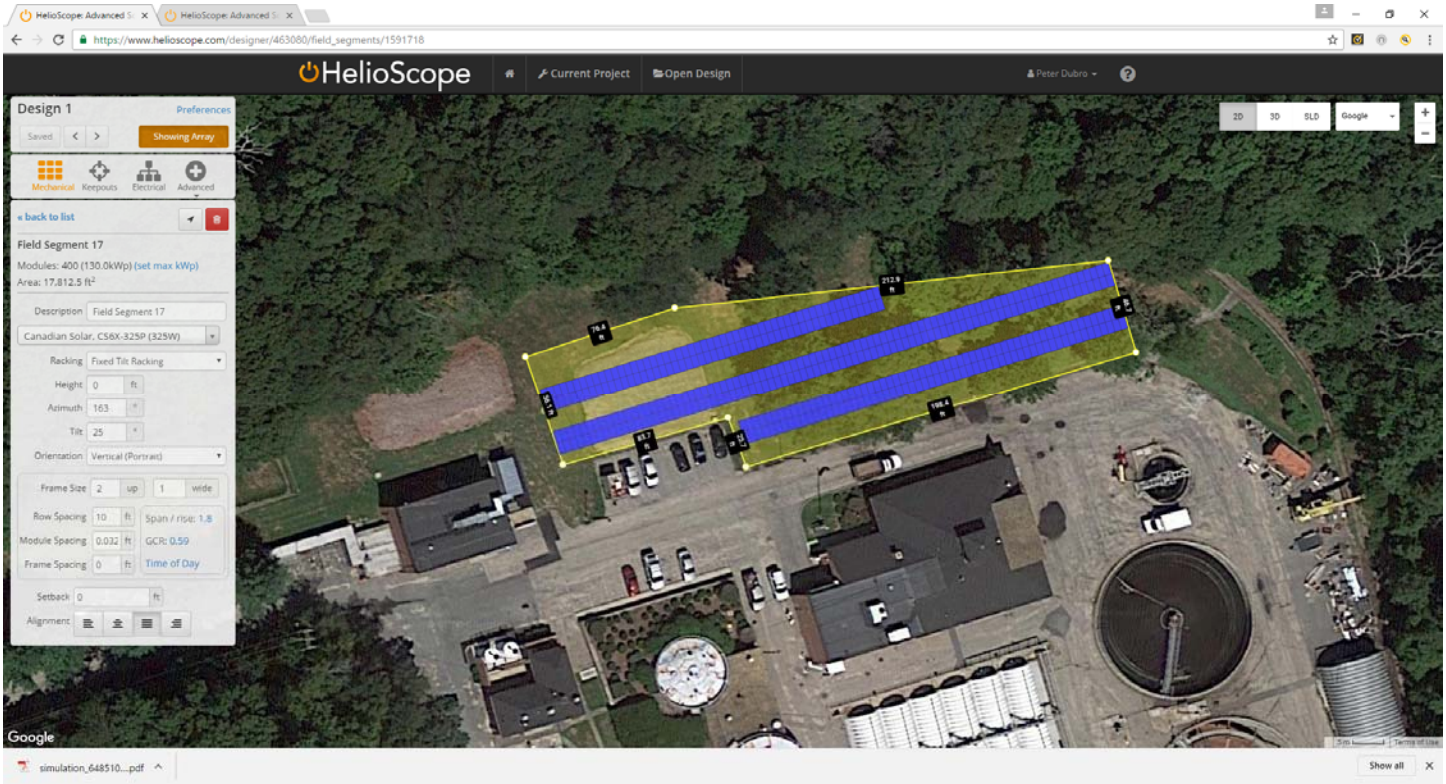

101 Asylum Road: 12.0kW DC 15,997kWh

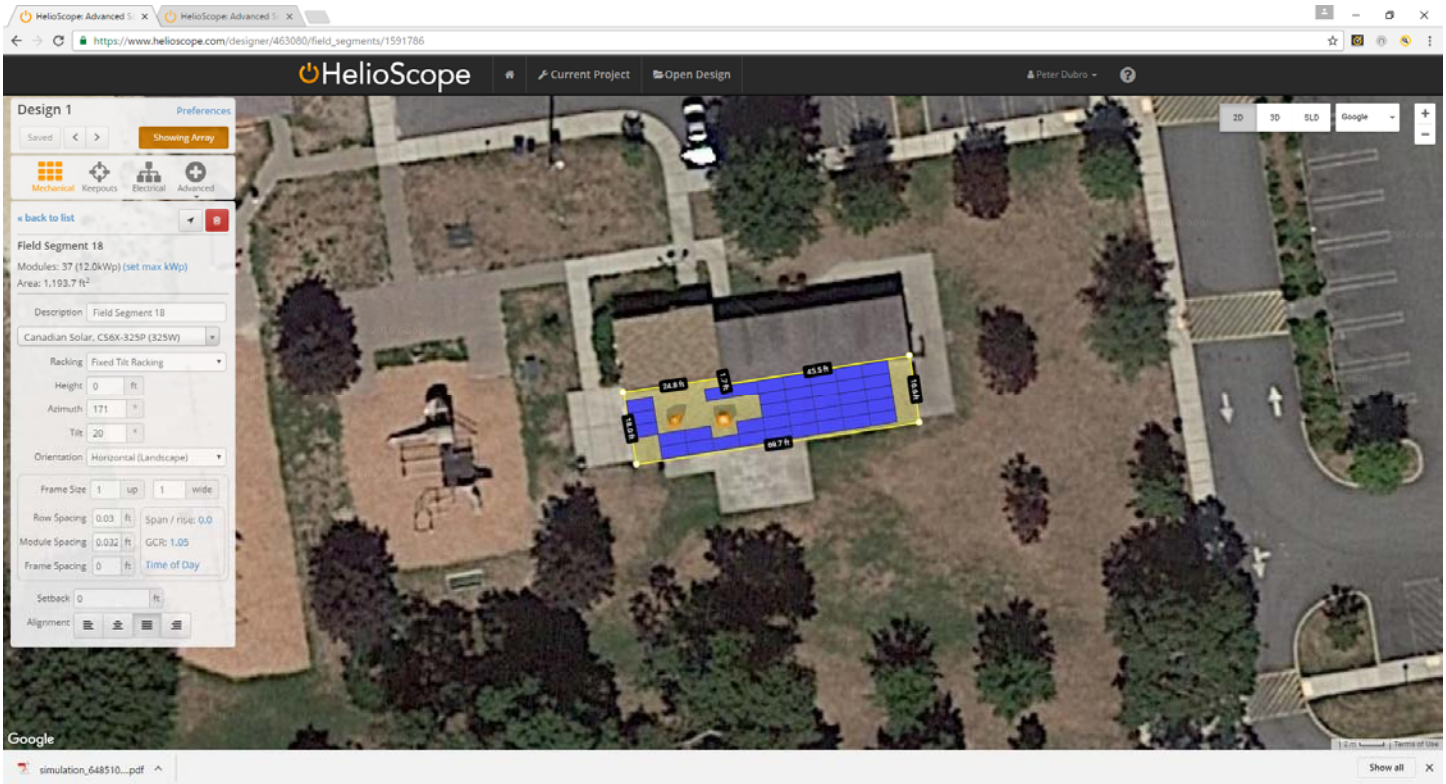

199 Chestnut Street: 466.9kW DC 577,364kWh

235 High Street: 25.0kW DC 32,495kWh

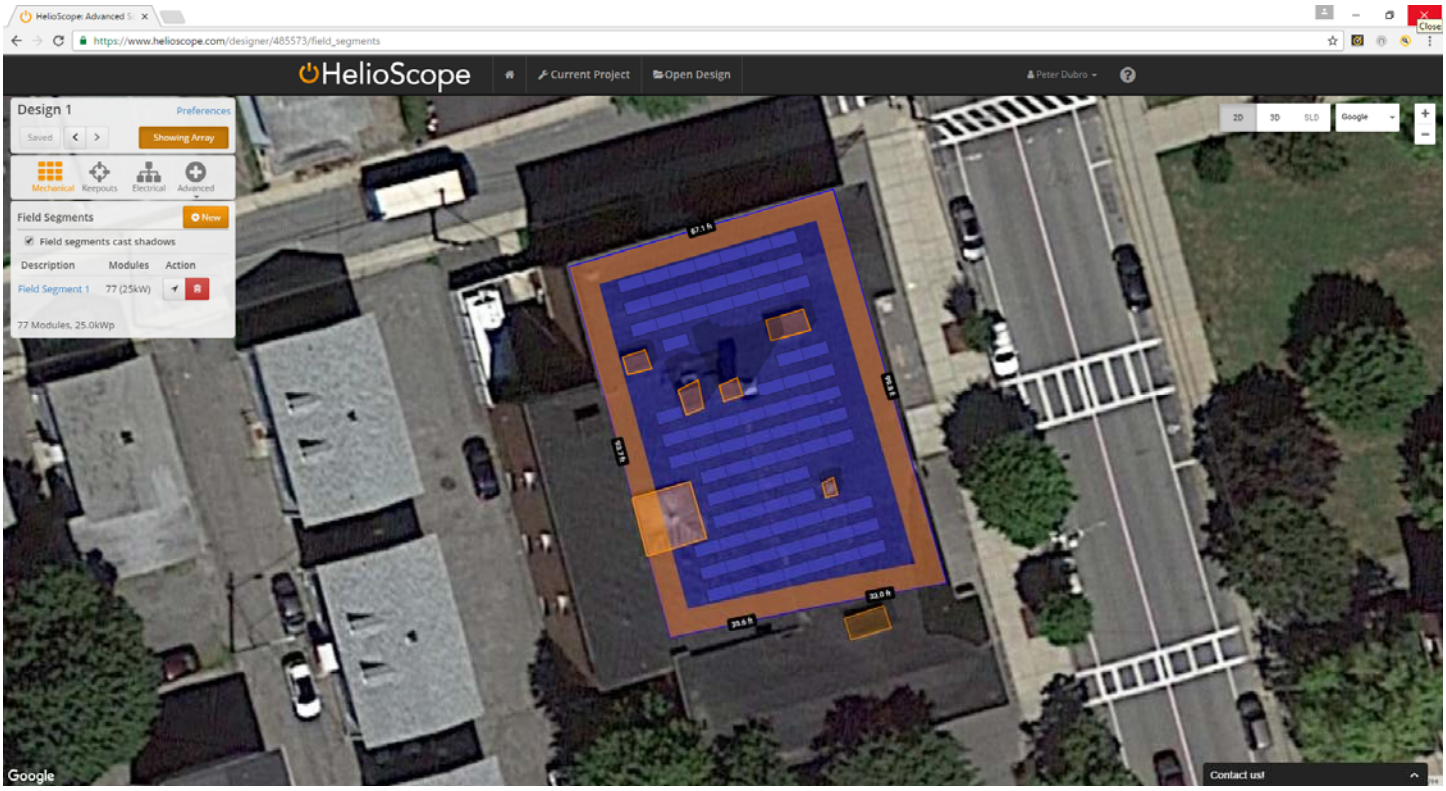

100 Federal Road: 25.0kW DC 33,397kWh

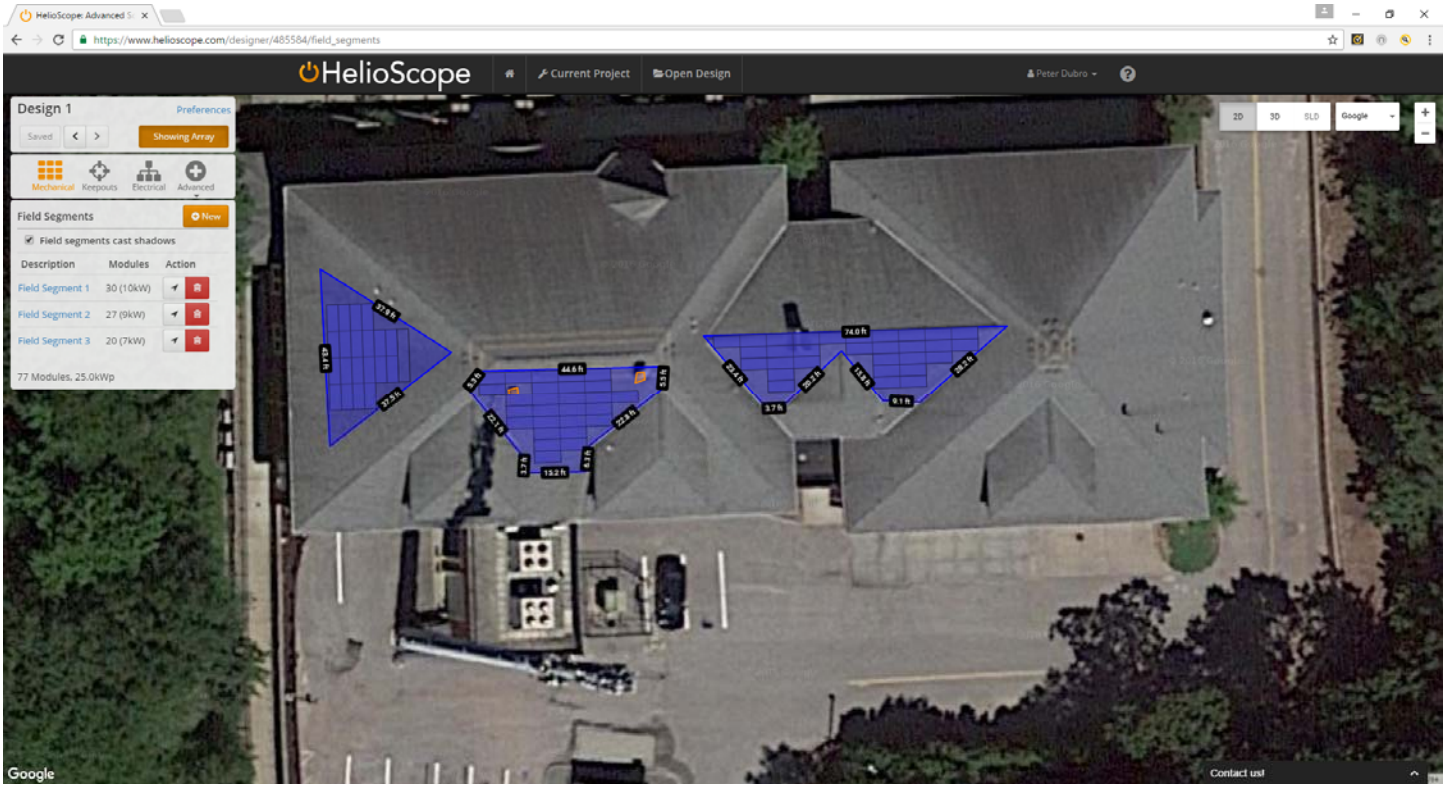

220 Lincoln Avenue: 690.8kW DC 893,870kWh

261 Middle Highway: 404.0kW DC 511,239kWh

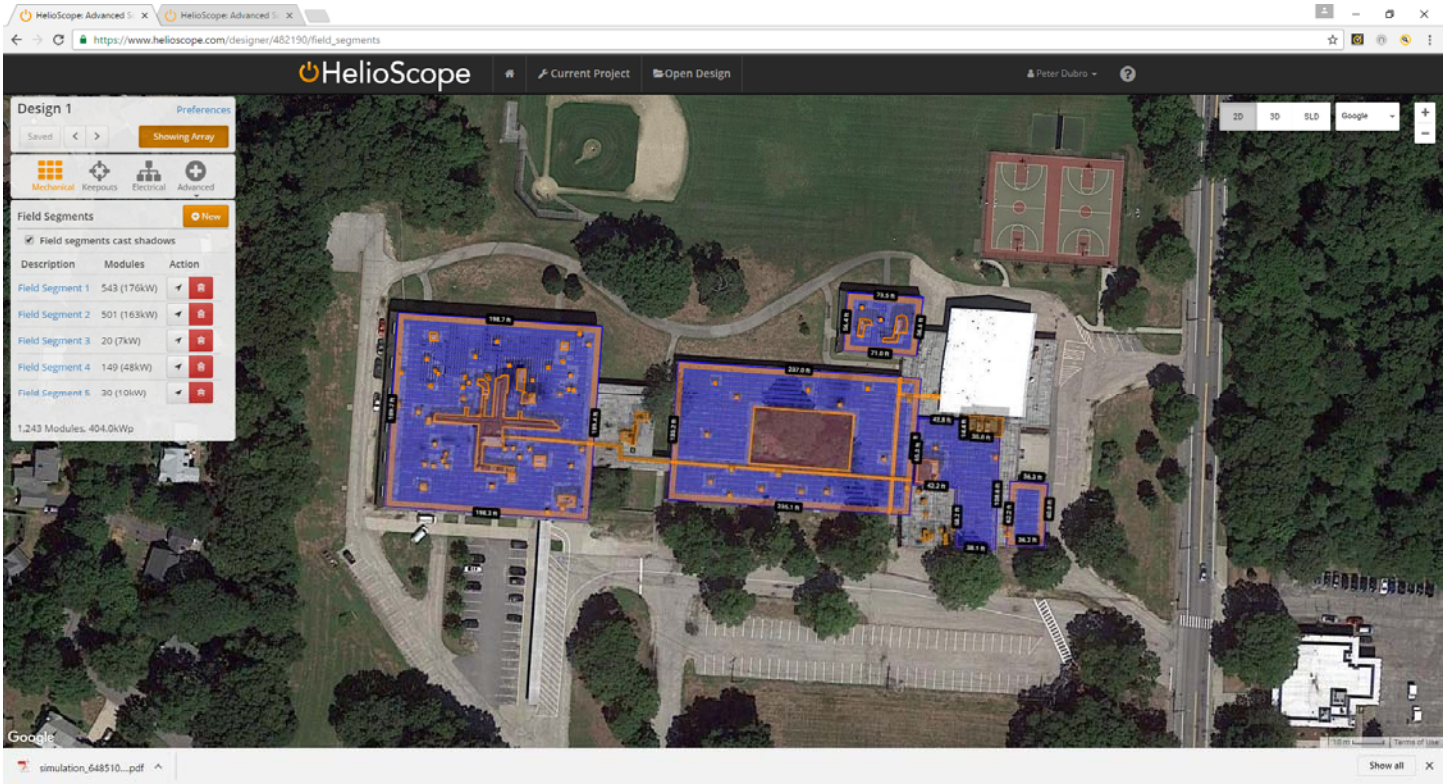

New Meadows Road: 242.8kW DC 305,516kWh

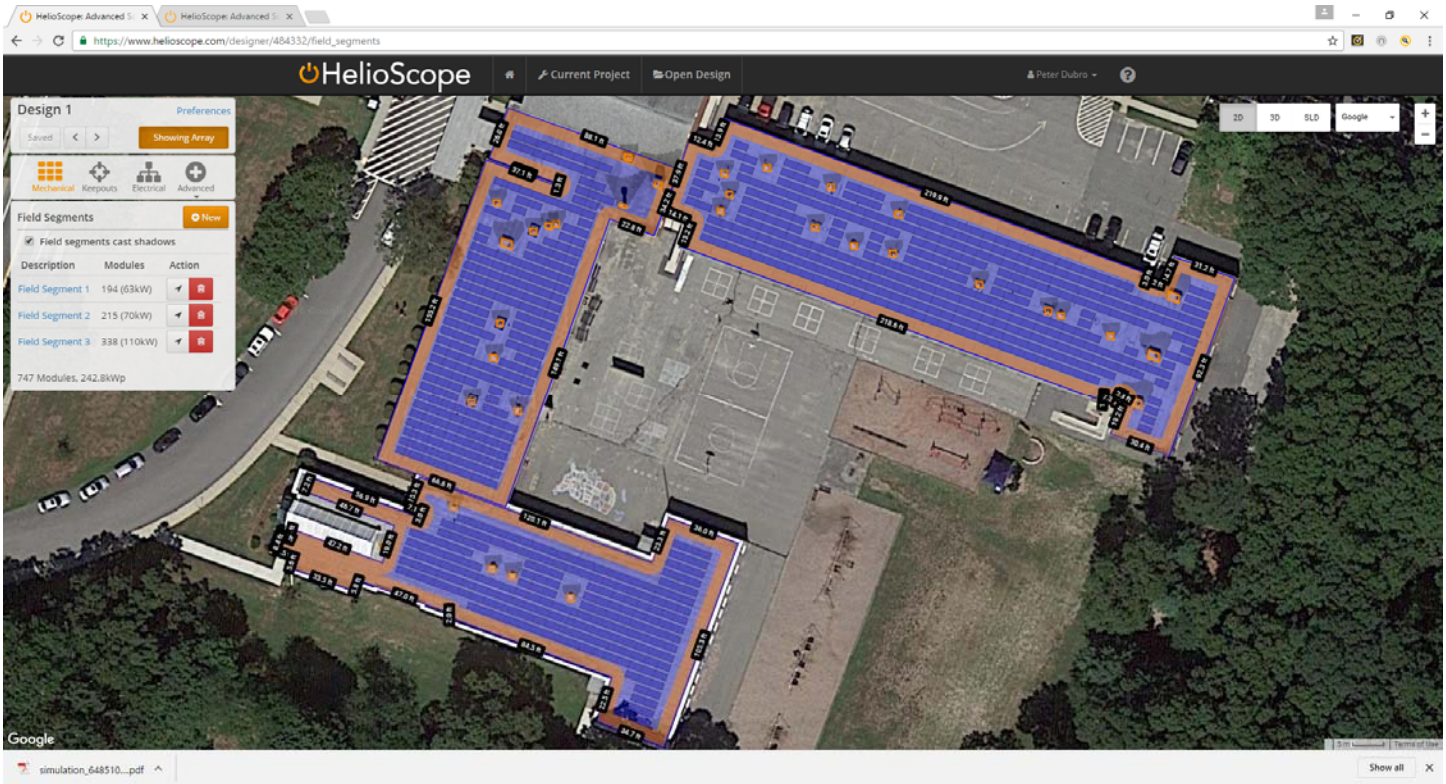

400 Nayatt Road: 187.5kW DC 237,314kWh

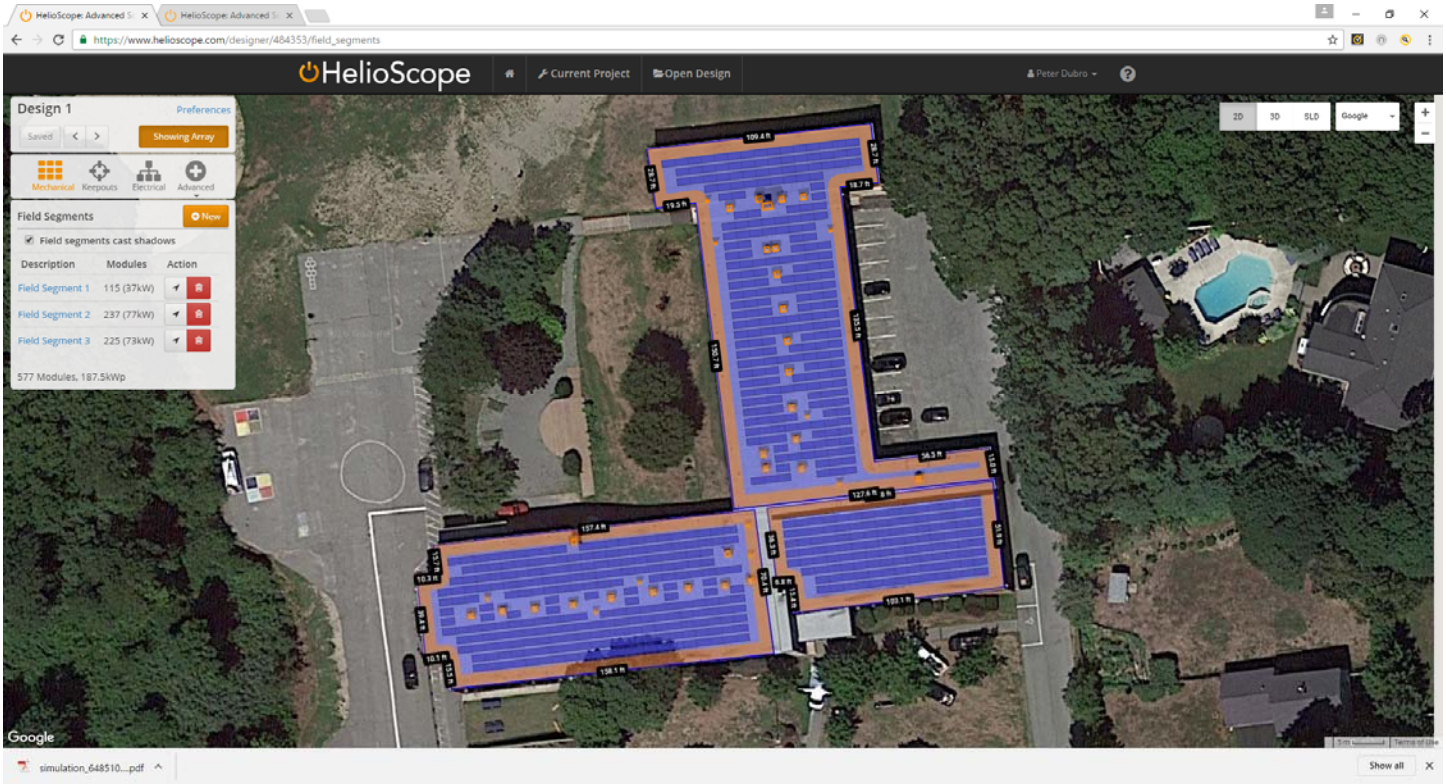

60 Middle Highway: 189.2kW DC 239,526kWh

364 Sowams Road: 166.7kW DC 210,827kWh

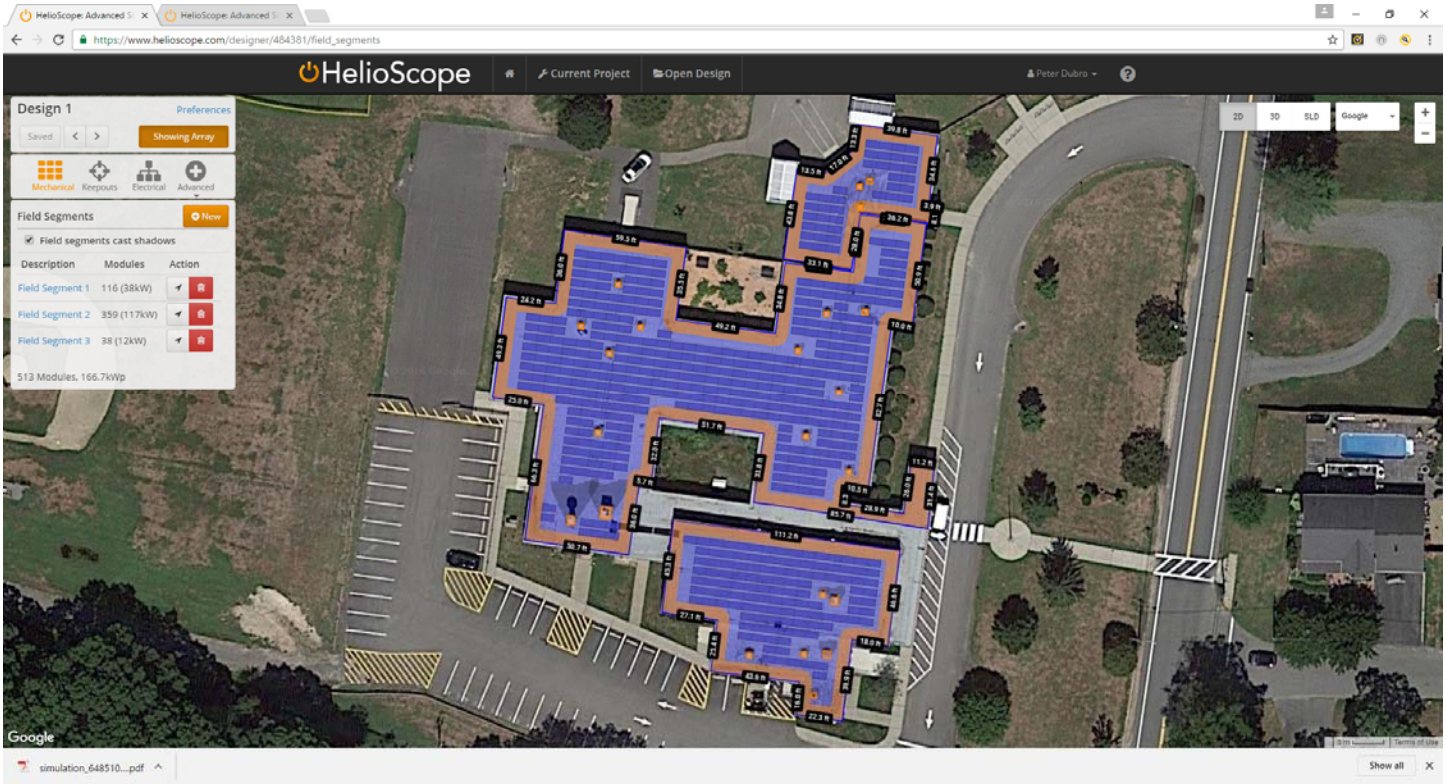

Spring Grove, Glocester Property 3,198.7kW DC 4,376,992kWh

Appendix II: Pricing Proposal

Quahog Solar

Pricing Proposal

Quahog Solar's pricing for this proposal is broken into three parts for the three different types of system offered to the Towns, i) the Landfill Project, ii) rooftop or ground-mount systems on buildings/land owned by the Towns, and iii) a system installed on land controlled by Quahog and producing power sold to the Towns through a PPA/virtual net metering credit agreement.

I. Landfill (3.0141 kW DC as per technical write-up)

Alternative 1. PPA/virtual net metering credit agreement (20 years)

12.25 cents per kWh with 1.5% annual escalation

Alternative 2. Rent (20 years)

Rent of $25,000 per annum with 1% annual escalation, with one-time right to renew to be negotiated Rent is inclusive of any property taxes. Rent is inclusive of any property taxes.

II. Rooftops Owned by the Towns

Rent of $17,500 per MW DC (see technical write-up for preliminary design sizes of each site) per annum with 1% annual escalation, term of 20 years. Rent is inclusive of any property taxes.

III. Land Controlled by Quahog. PPA/virtual net metering credit agreement (20 years)

12.75 cents per kWh with 1.5% annual escalation. Please see technical write-up for preliminary design size and please note that site location is subject to change to maximize the cost-effectiveness of the system.